TAIYO AMERICA

Pneumatic Tie Rod Style Cylinders

Series U250 / U250N NFPA Industrial Air Cylinders
Catalog HY08-T0915-1/NA

In line with our policy of continuing product improvement, specifications and information contained in this catalog are subject to change.
Copyright ©2019 by Taiyo America. All rights reserved.
PRINTED IN THE U.S.A.

⚠ WARNING

FAILURE OR IMPROPER SELECTION OR IMPROPER USE OF THE PRODUCTS AND/OR SYSTEMS DESCRIBED HEREIN OR RELATED ITEMS CAN CAUSE DEATH, PERSONAL INJURY AND PROPERTY DAMAGE.

This document and other information from the Parker Hannifin Corporation, its subsidiaries and authorized distributors provide product and/or system options for further investigation by users having expertise. It is important that you analyze all aspects of your application, including consequences of any failure and review the information concerning the product or system in the current product catalog. Due to the variety of operating conditions and applications for these products or systems, the user, through its own analysis and testing, is solely responsible for making the final selection of the products and systems and assuring that all performance, safety and warning requirements of the application are met.

The products described herein, including without limitation, product features, specifications, designs, availability and pricing, are subject to change by Taiyo America and its subsidiaries at any time without notice.

Offer of Sale

The items described in this document are hereby offered for sale by Taiyo America, its subsidiaries or its authorized distributors. This offer and its acceptance are governed by provisions stated on a separate page of the document entitled ‘Offer of Sale’.

Taiyo America
St. Marys, OH
USA

Table of Contents

Product Design	2
Specifications / Mounting Styles	3
Cylinder Features	4-5
Rod End Dimensions 1-1/2 to 5" Bore	6
Mounting Styles 1-1/2 - 5" Bore	
Tie Rod Mounting Styles T, TB, TC and TD	6
Flange, Side and Pivot Mounting Styles H, J, C, F, BB and BC	7
Mounting Styles 1-1/2 - 6" Bore	
Side End Angle Style CB	8
Mounting Styles 1-1/2 - 5" Bore	
Trunnion Mounting Styles D, DB and DD	9
Mounting Styles 6" Bore	
Tie Rod Mounting Styles T, TB, TC and TD	10
Flange Mounting Styles H and J	10
Side Mounting Styles C and F	10
Pivot Mounting Styles BB and BC	11
Trunnion Mounting Styles D, DB and DD	11
Double Rod Models 1-1/2" to 6" Bore	12
Push and Pull Forces	13
Stop Tubing / Mounting Classes	14
Cylinder Stroke Chart	15
How to Order	16
Model Numbers, How to Develop and Decode Them	17
Magnetically Actuated Switches	18
Switch Mounting Data and How to Order Switches	19
Switch Connectors	20
Parts Identification and Seal Kits	21
Service Kits & Replacement Parts	22
Non-Rotating Parts ID	23
Non-Rotating Service Kits & Accessories	24
Rod End Accessories	25
Rod End Accessories / Alignment Couplers	26
Cylinder Safety Guide	27-28
Offer of Sale	IBC

Series U250 / U250N
Pneumatic Tie Rod Cylinders

The No-Compromise Design
NFPA Industrial Air Cylinder from Taiyo America.

Proven reliability at a cost that makes it right for your air cylinder application.

Series U250 for filtered and lubricated compressed air

Series U250N for filtered and dry compressed air

- 200 psi nominal air pressure
- Standard bore sizes: 1½", 2", 2½", 3¼", 4", 5" and 6"
- 14 Standard mounting styles

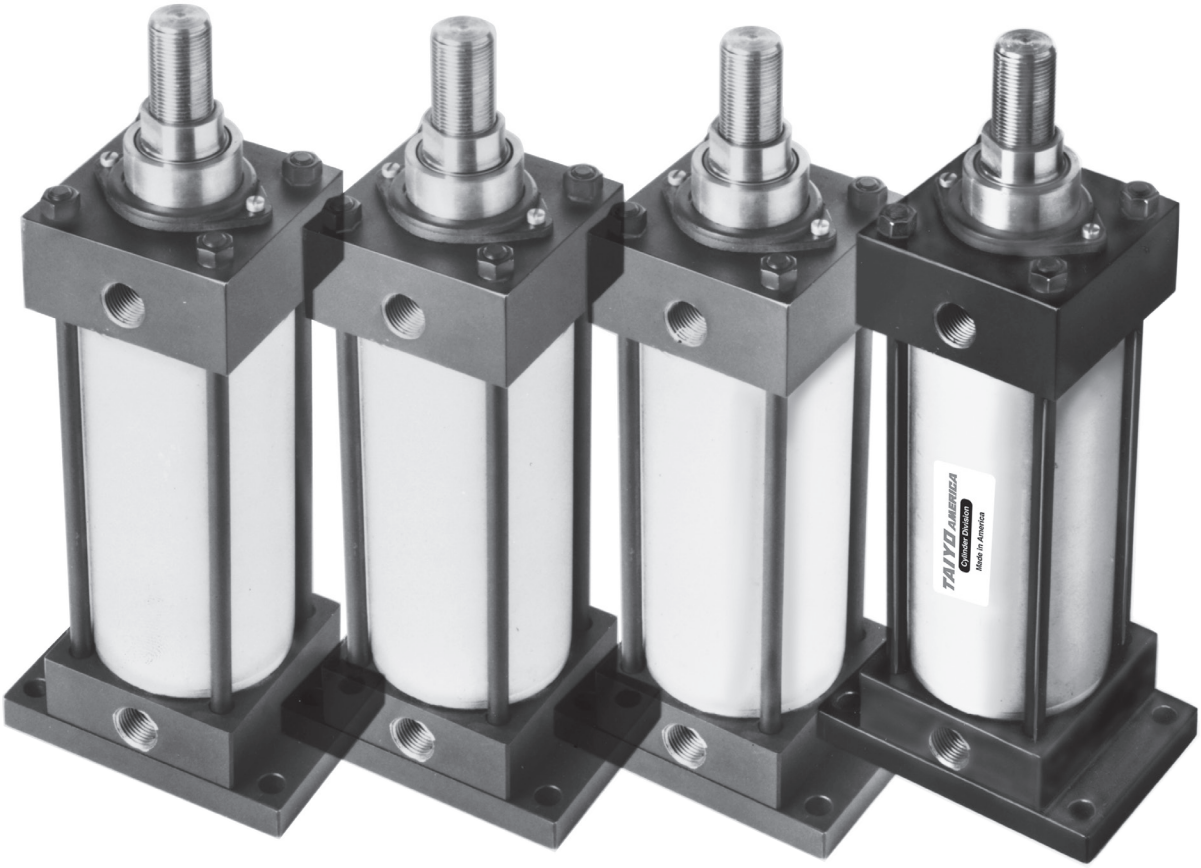

Exclusive with the New Taiyo America Check Seal Cushions:

- Faster Cycle Time
- Easy Precision Adjustment
- Minimum Wear
- Low Pressure Drop

Series U250 / U250N
NFPA Industrial Air Cylinders

Taiyo America U250 / U250N series air cylinders meet or exceed NFPA Pneumatic Standards and except for Tie Rod Mount Styles conform to ANSI/(NFPA) T3.6.7R3 - 2009 for mounting dimensions of Square Head Industrial Fluid Power Cylinders.

Standard Specifications

- Seven bore sizes – 1½" through 6"
- Three rod diameters – ⅝", 1" and 1⅜"
- Fourteen mounting styles
- Choice of three rod end styles
- Cushions at head, cap or both ends
- Double rod models in six mounting styles
- Non-rotating rods optional
- JIC interchangeable
- Standard Temperature – -10°F to +165°F with standard seals; -10°F to +250°F with fluorocarbon seals.

For complete ordering information see the How to Order and Model Number pages.

Available Mountings

Tie Rods Extended Head End **Style TB** NFPA MX3 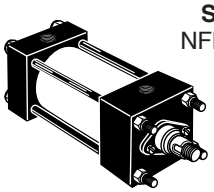	Tie Rods Extended Cap End **Style TC** NFPA MX2 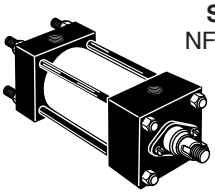	Tie Rods Extended Both Ends **Style TD** NFPA MX1 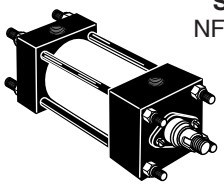	Basic Cylinder **Style T** NFPA MP1 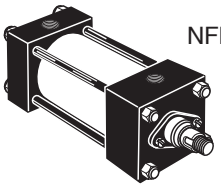
Head Rectangular Flange **Style J** NFPA MF1 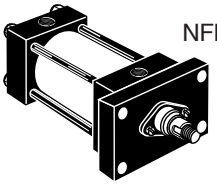	Side Lugs **Style C** NFPA MS2 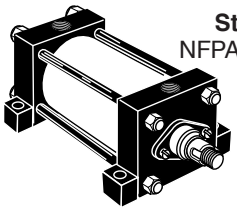	Cap Rectangular Flange **Style H** NFPA MF2 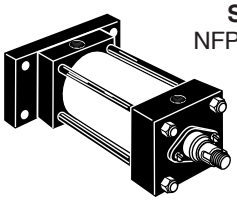	Side Tapped **Style F** NFPA MS4 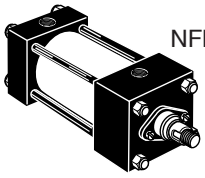
Head Trunnion **Style D** NFPA MT1 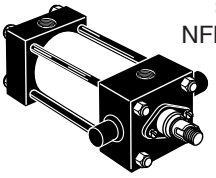	Cap Trunnion **Style DB** NFPA MT2 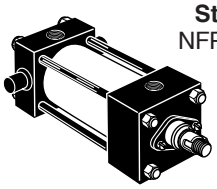	Intermediate Trunnion **Style DD** NFPA MT4 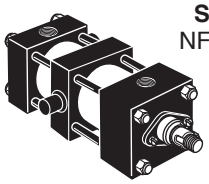	Cap Detachable Clevis **Style BC** NFPA MP2 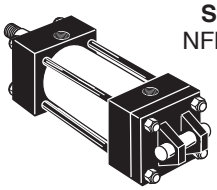
Side End Angles **Style CB** NFPA MS1 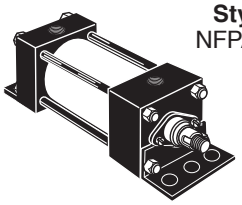	Double Rod Cylinders 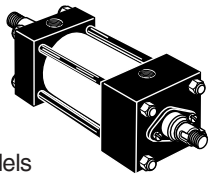 **Style KTB** See Double Rod Models page for styles available.		Cap Fixed Clevis **Style BB** NFPA MP1 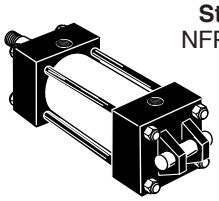

Taiyo America Series U250 / U250N

The inside story on the no-compromise design

Here's an inside look at the solid design and construction that makes Taiyo America's U250 / U250N the high performing, longer-lasting, economical choice for your air cylinder applications.

Hard chrome-plated and polished piston rod of 100,000 psi yield, high tensile strength steel for reliable performance and long rod seal life, less friction. For Hex Rod details, please consult factory.

Ports N.P.T.F. ports are standard.

Rugged square steel heads and caps resist shock and provide maximum strength within minimum space. Factory-treated to resist corrosion.

Piston rod lipseal/wiper combination is completely self-compensating for zero leakage at all pressures. Keeps pressure in, contamination out.

High strength piston rod end stud (125,000 psi minimum yield steel) with rolled threads. Choice of male or female thread at no extra cost. Anaerobic adhesive is used to permanently lock the stud to the rod.

Bolt-on, high strength, rod gland removes screwdriver-easy on all mounting styles and bore sizes for fast, on-the-job rod seal replacement if needed.

Extra long inboard bearing surface insures lubrication from within the cylinder for longer life.

Factory prelubrication of rod and piston seal surfaces (rod bearing and cylinder bore surfaces).

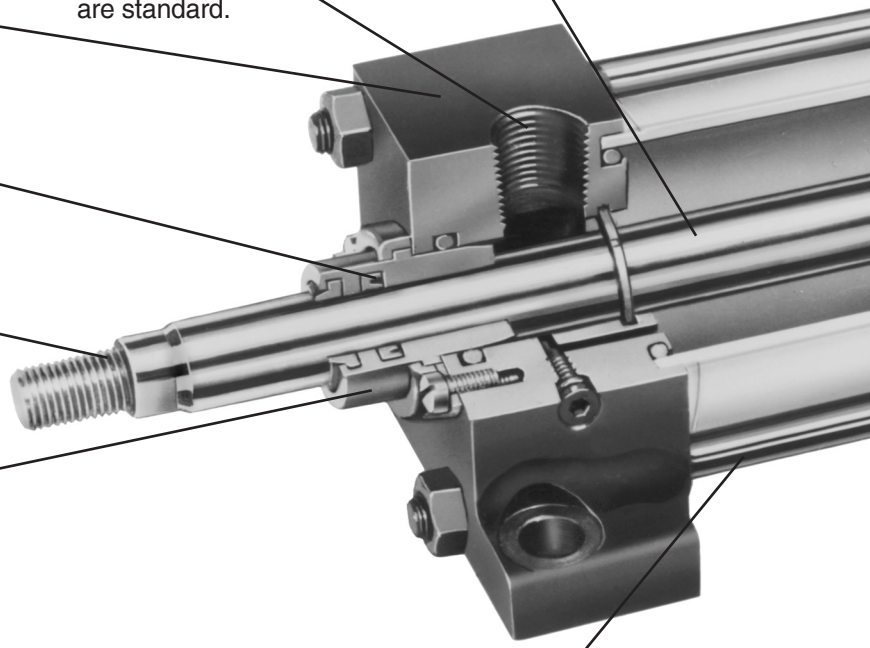

Tie rods are 100,000 psi minimum yield steel with rolled threads for added strength. High strength nuts provide extra margin of safety.

Taiyo America's New Exclusive Check Seal Cushions

For Increased Productivity and Maximum Performance

The U250 / U250N check seal cushion is different from ordinary cushion designs. It combines the sealing capabilities of a lipseal for efficient capture of air for effective cushioning with check valve action for quick stroke reversal.

The lipseal design also provides "floating cushions" to assure cushion repeatability and long life. At the start of the stroke in each direction, the check valve design allows full fluid flow to piston face with a minimum pressure drop for maximum power stroke.

Additional benefits of the new check seal cushions are increased productivity and top performance for faster cycle time, minimum wear, easy adjustment and low pressure drop.

The basic cushion design is optional and available on either the head end, cap end or both ends without change in envelope or mounting dimensions. A cushion adjusting needle is supplied for easy, precise adjustment on all bore sizes.

At the **head end** of the cylinder, the check seal is assembled into a groove in the central bore of the head, with the groove being slightly wider and larger in diameter than the check seal, so that it floats laterally and radially within predetermined limits. The check seal has four grooves molded into the face to provide flow passages; the assembly is put together with the lip of the seal facing toward the inside of the cylinder.

A cushion sleeve is mounted on the piston rod, so that as the rod extends, air ahead of the piston flows freely out the head-end port. When the end of the cushion sleeve reaches the lip of the check seal, it seals on the wall of the groove, trapping air for cushioning.

As pressure is applied to the head-end port on retraction, the air forces the seal towards the inside of the cylinder.

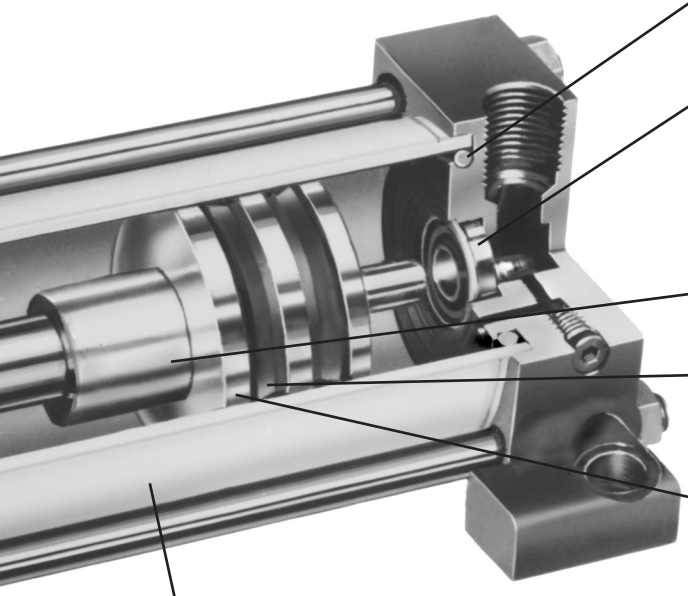

Cylinder body O-ring seals are pressure-actuated for positive sealing. Commercially available and easily replaced, if necessary.

Unique "check seal" cushions with molded flow passages combine the benefits of floating cushions with check valve action, provides effective cushioning and quick stroke reversal for more cycles per hour and higher production rates. Cushion needle valves make precise adjustment quick and easy.

Longest standard cushions in the industry for maximum cushioning capability.

Fully dynamic, self-compensating Lipseal™ piston seals designed for no-leak service at all operating pressures; easily replaced, if needed, without removing piston from rod.

One-piece, nodular iron piston, positively locked to rod – retains lubrication and provides a wide bearing surface. An anaerobic adhesive is used to permanently lock and seal the piston to the rod.

Piston-to-rod thread diameter increases with rod diameter for added strength and is equal to outer end Style 4 thread on all rod sizes.

Aluminum Alloy cylinder body with corrosion resistant smooth hard coated bore on 1½" and 2" bores.

Chrome Plated Steel Tubing honed to a 15 micro inch finish on 2½", 3¼", 4", 5" and 6" bores (cylinders supplied with reed switches are equipped with aluminum barrels).

The air then flows around the OD of the seal and through the flutes of the seal washer. Full-flow, quick starts with little or no pressure drop is just one of the major benefits of the design.

At the **cap end** of the cylinder, the check seal is assembled into a cavity in the face of the cap with four beads molded on the OD to provide a flow passage. A fluted washer and retaining ring, rather than a groove, and a cushion spear which extends from the rear face of the piston complete the cap end assembly. When the rounded, tapered portion of the cushion spear reaches the lip of the seal, the seal seats against the rear wall of the cavity, trapping air for cushioning.

The configuration of the check-seal lip, and the controlled shape of the cushion sleeve together prevent the lip from rolling over or extruding. A check seal used at both ends provides the benefits of floating cushions with check valve action for maximum cushion effectiveness and quick stroke reversal. This new check-seal design has been tested in millions of cycles, in the lab and in the field.

U250 / U250N Series cushions are the longest in the industry and are designed for maximum customer benefit.

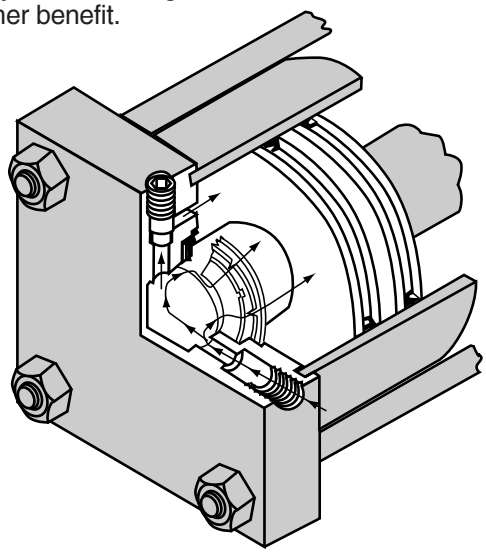

Basic Cylinder Style T (NFPA Style MX0)

Rod end Style 4 is standard per dimension KK. Styles 8 or 9 are optional at no extra charge.
A high strength rod end stud is standard on Style 4 for all rod sizes.

For special rod ends such as nonstandard threads, rod extensions, blanks, etc., specify Style 3 and furnish desired dimensions for KK, A and W or WF.

Please note A + W = LA, A + WF = LAF (Where F is the retainer thickness on a given mounting).

If rod end is not specified, Style 4 will be supplied.

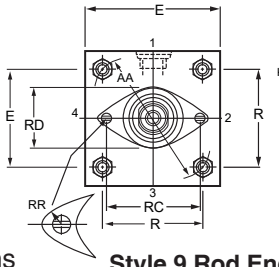

Style 9 Rod End
NFPA SF

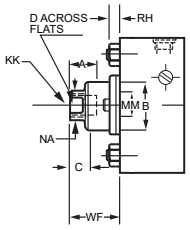

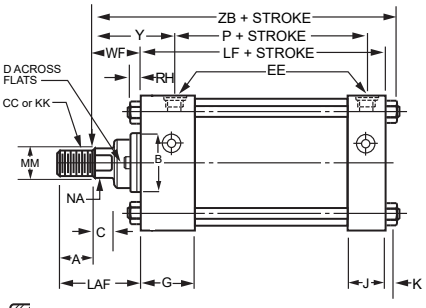

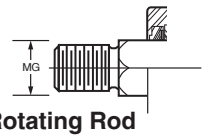

Non-Rotating Rod

Style 4 & 8 Rod End
NFPA SM & IM

Bore	Rod No.	Rod Dia. MM	Hex Rod MG	Thread Style 8 CC	Thread Style 4 & 9 KK	A	+.000 -.002 B	C	D	LA	LAF	NA	RC	RD	RH	RR	V	W	WF	Y	AA	E	(NPTF) EE	G	J	K	Add Stroke LF	Add Stroke P	Add Stroke ZB
				Rod End Dimensions – Styles 9 (NFPA SF), 4 (NFPA SM) and 8 (NFPA IM)																	**Basic Envelope and Mounting Dimensions**								
1½	1	5/8	0.551	1/2-20	7/16-20	3/4	.999	3/8	1/2	1 3/8	1 3/4	9/16	1 11/16	1 5/16	3/16	11/64	1/4	5/8	1	1 15/16	2.02	2	3/8	1 1/2	1	1/4	3 5/8	2 1/4	4 7/8
2	1	5/8	0.551	1/2-20	7/16-20	3/4	.999	3/8	1/2	1 3/8	1 3/4	9/16	1 11/16	1 5/16	3/16	11/64	1/4	5/8	1	1 15/16	2.6	2 1/2	3/8	1 1/2	1	5/16	3 5/8	2 1/4	4 15/16
	3	1	-	7/8-14	3/4-16	1 1/8	1.499	1/2	7/8	2 1/8	2 1/2	15/16	2 3/16	1 13/16	3/16	11/64	1/2	1	1 3/8	2 5/16									5 5/16
2½	1	5/8	0.551	1/2-20	7/16-20	3/4	.999	3/8	1/2	1 3/8	1 3/4	9/16	1 11/16	1 5/16	3/16	11/64	1/4	5/8	1	1 15/16	3.1	3	3/8	1 1/2	1	5/16	3 3/4	2 3/8	5 1/16
	3	1	-	7/8-14	3/4-16	1 1/8	1.499	1/2	7/8	2 1/8	2 1/2	15/16	2 3/16	1 13/16	3/16	11/64	1/2	1	1 3/8	2 5/16									5 7/16
3¼	1	1	0.906	7/8-14	3/4-16	1 1/8	1.499	1/2	7/8	1 7/8	2 1/2	15/16	2 3/16	1 13/16	3/16	11/64	1/4	3/4	1 3/8	2 7/16	3.9	3 3/4	1/2	1 3/4	1 1/4	3/8	4 1/4	2 5/8	6
	3	1 3/8	-	1 1/4-12	1-14	1 5/8	1.874	5/8	1 1/8	2 5/8	3 1/4	1 5/16	2 11/16	2 15/64	7/32	13/64	3/8	1	1 5/8	2 11/16									6 1/4
4	1	1	0.906	7/8-14	3/4-16	1 1/8	1.499	1/2	7/8	1 7/8	2 1/2	15/16	2 3/16	1 13/16	3/16	11/64	1/4	3/4	1 3/8	2 7/16	4.7	4 1/2	1/2	1 3/4	1 1/4	3/8	4 1/4	2 5/8	6
	3	1 3/8	-	1 1/4-12	1-14	1 5/8	1.874	5/8	1 1/8	2 5/8	3 1/4	1 5/16	2 11/16	2 15/64	7/32	13/64	3/8	1	1 5/8	2 11/16									6 1/4
5	1	1	0.906	7/8-14	3/4-16	1 1/8	1.499	1/2	7/8	1 7/8	2 1/2	15/16	2 3/16	1 13/16	3/16	11/64	1/4	3/4	1 3/8	2 7/16	5.8	5 1/2	1/2	1 3/4	1 1/4	7/16	4 1/2	2 7/8	6 5/16
	3	1 3/8	-	1 1/4-12	1-14	1 5/8	1.874	5/8	1 1/8	2 5/8	3 1/4	1 5/16	2 11/16	2 15/64	7/32	13/64	3/8	1	1 5/8	2 11/16									6 9/16

Tie Rod Mounted Styles TB, TC, TD

Style TB
NFPA
(MX3)

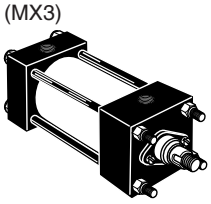

Style TC
NFPA
(MX2)

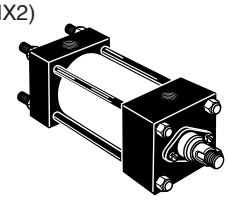

Style TD
NFPA
(MX1)

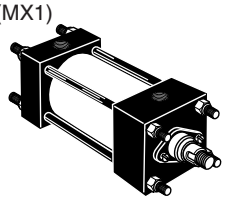

Style TB, Tie Rods Extended, is illustrated at right. Style TC, Cap Tie Rods Extended, and Style TD, Both Ends Tie Rods Extended, can be dimensioned from Style TB drawing.

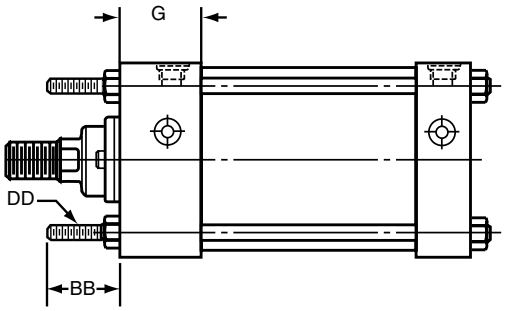

Dimensions for Specific Series U250 / U250N Mounting Styles H, J, C, F and BB

Bore	Rod No.	Rod Dia. MM	BB	CB	+.000 -.002 CD	CW	DD	F	FB	L	LR	M	MR	ND	NT	R	SB*
1½	1	5/8	1	3/4	.501	1/2	1/4-28	3/8	5/16	3/4	3/4	1/2	5/8	5/16	1/4-20	1.43	7/16
2	1	5/8	1 1/8	3/4	.501	1/2	5/16-24	3/8	3/8	3/4	3/4	1/2	5/8	11/32	5/16-18	1.84	7/16
	3	1															
2½	1	5/8	1 1/8	3/4	.501	1/2	5/16-24	3/8	3/8	3/4	3/4	1/2	5/8	7/16	3/8-16	2.19	7/16
	3	1															
3¼	1	1	1 3/8	1 1/4	.751	5/8	3/8-24	5/8	7/16	1 1/4	1	3/4	15/16	1/2	1/2-13	2.76	9/16
	3	1 3/8															
4	1	1	1 3/8	1 1/4	.751	5/8	3/8-24	5/8	7/16	1 1/4	1	3/4	15/16	5/8	1/2-13	3.32	9/16
	3	1 3/8															
5	1	1	1 13/16	1 1/4	.751	5/8	1/2-20	5/8	9/16	1 1/4	1	3/4	15/16	3/4	5/8-11	4.10	13/16
	3	1 3/8															

*Upper surface spotfaced for socket head screws.

Flange Mountings Styles H, J *(see page 6 for additional dimensions)*

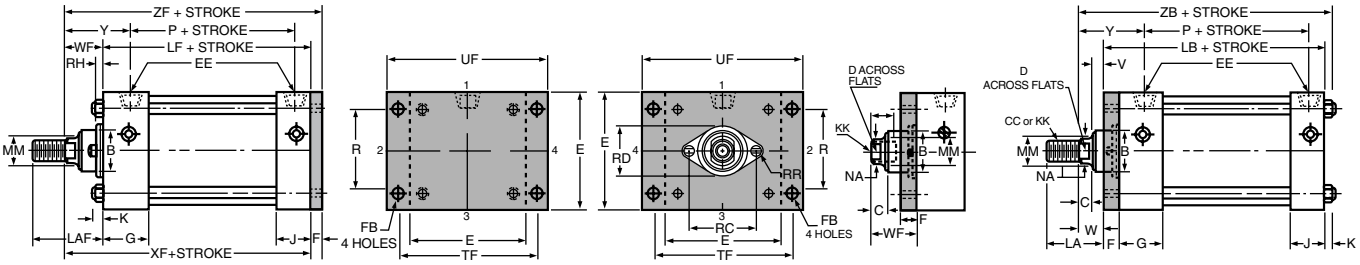

Style H (NFPA MF2) **Style 9 Rod End** J Mount Only **Style J** (NFPA MF1)

Side Mountings Styles C, F *(see page 6 for additional dimensions)*

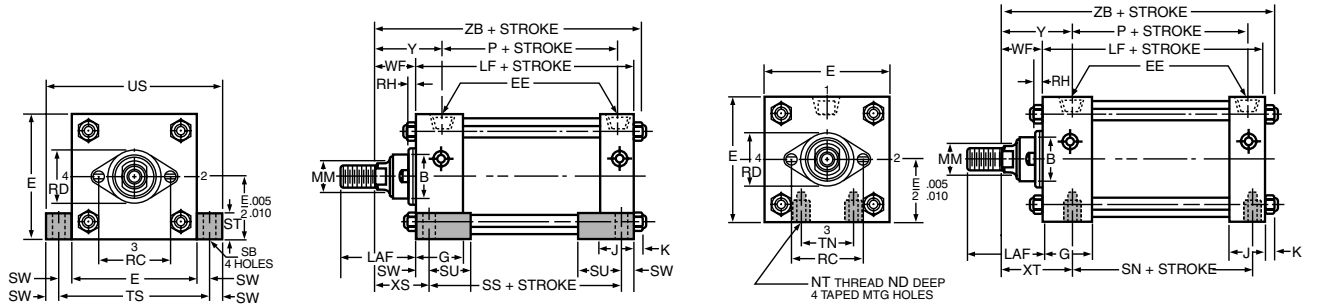

Style C (NFPA MS2) **Style F** (NFPA MS4)

Pivot Mountings Styles BB, BC

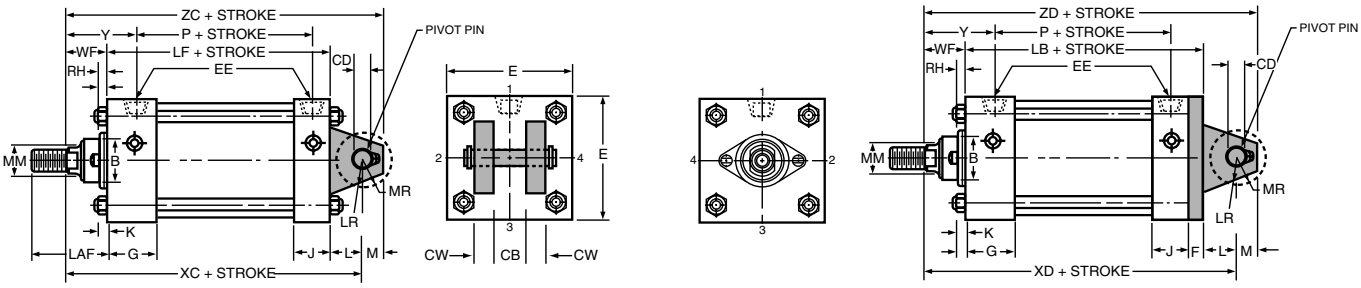

Style BB (NFPA MP1) **Style BC** (NFPA MP2)

Tie Rods thread into Cap on 1½", 2", 2½" & 3¼" bore sizes as shown. Larger sizes have Tie Rod Nuts at both ends.

Dimensions for Specific Series U250 / U250N Mounting Styles H, J, C, F, BB and BC

Bore	ST	SU	SW	TF	TN	TS	UF	US	LB	Add Stroke									
										SN	SS	XC	XD	XF	XS	XT	ZC	ZF	ZD
1½	½	15/16	⅜	2¾	⅝	2¾	3⅜	3½	4	2¼	2⅞	5⅜	5¾	4⅝	1⅜	1 15/16	5⅞	5	6¼
2	½	15/16	⅜	3⅜	⅞	3¼	4⅛	4	4	2¼	2⅞	5⅜ 5¾	5¾ 6⅛	4⅝ 5	1⅜ 1¾	1 15/16 2 5/16	5⅞ 6¼	5 5⅜	6¼ 6⅝
2½	½	15/16	⅜	3⅞	1¼	3¾	4⅝	4½	4⅛	2⅜	3	5½ 5⅞	5⅞ 6¼	4¾ 5⅛	1⅜ 1¾	1 15/16 2 5/16	6 6⅜	5⅛ 5½	6⅜ 6¾
3¼	¾	½	½	4 11/16	1½	4¾	5½	5¾	4⅞	2⅝	3¼	6⅞ 7⅛	7½ 7¾	5⅝ 5⅞	1⅞ 2⅛	2 7/16 2 11/16	7⅝ 7⅞	6¼ 6½	8¼ 8½
4	¾	½	½	5 7/16	2 1/16	5½	6¼	6½	4⅞	2⅝	3¼	6⅞ 7⅛	7½ 7¾	5⅝ 5⅞	1⅞ 2⅛	2 7/16 2 11/16	7⅝ 7⅞	6¼ 6½	8¼ 8½
5	1	11/16	11/16	6⅝	2 11/16	6⅞	7⅝	8¼	5⅛	2⅞	3⅛	7⅛ 7⅜	7¾ 8	5⅞ 6⅛	2 1/16 2 5/16	2 7/16 2 11/16	7⅞ 8⅛	6½ 6¾	8½ 8¾

Side End Angles
Style CB
(NFPA Style MS1)

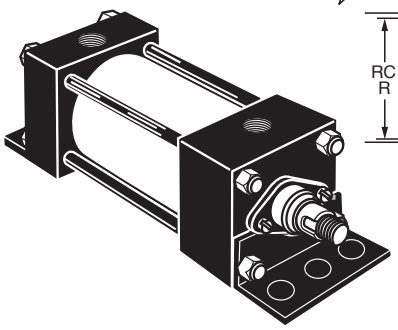

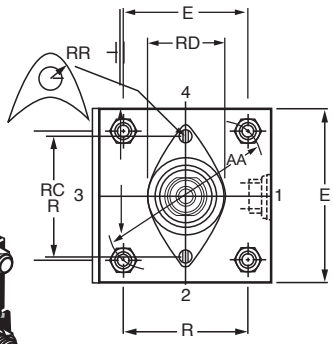

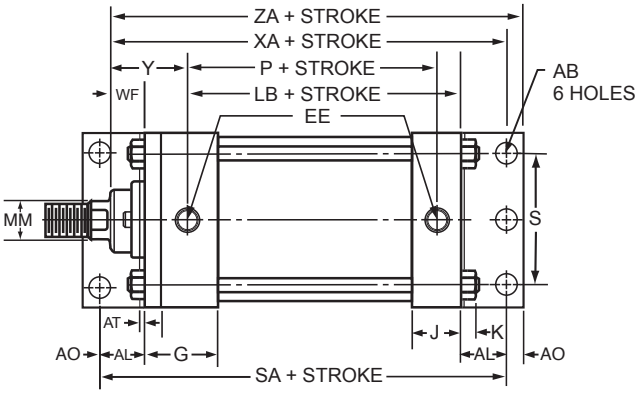

Table 1 - Envelope and Mounting Dimensions

Bore	AB	AH	AL	AO	AT	E	EB	EE NPTF	EL	EO	ES	ET	G	J	K	R	S	Add Stroke LB	P	SA	SE
1½	7/16	1 3/16	1	3/8	1/8	2	5/16	3/8*	3/4	1/4	9/16	17/32	1½	1	1/4	1.43	1¼	4	2¼	6	5½
2	7/16	1 7/16	1	3/8	1/8	2½	3/8	3/8*	15/16	5/16	5/8	5/8	1½	1	5/16	1.84	1¾	4	2¼	6	5⅞
2½	7/16	1 5/8	1	3/8	1/8	3	3/8	3/8*	1 1/16	5/16	13/16	25/32	1½	1	5/16	2.19	2¼	4⅛	2⅜	6⅛	6¼
3¼	9/16	1 15/16	1¼	1/2	1/8	3¾	7/16	1/2	7/8	3/8	1	15/16	1¾	1¼	3/8	2.76	2¾	4⅞	2⅝	7⅜	6⅝
4	9/16	2¼	1¼	1/2	1/8	4½	7/16	1/2	1	3/8	1¼	1 5/32	1¾	1¼	3/8	3.32	3½	4⅞	2⅝	7⅜	6⅞
5	11/16	2¾	1⅜	5/8	3/16	5½	9/16	1/2	1 1/16	1/2	1⅜	1⅜	1¾	1¼	7/16	4.10	4¼	5⅛	2⅞	7⅞	7¼
6	13/16	3¼	1⅜	5/8	3/16	6½	9/16	3/4	1	1/2	1¾	1 19/32	2	1½	7/16	4.88	5¼	5¾	3⅛	8½	7¾

* On 1", 1½", 2" and 2½" bore sizes, the head-end (only) pipe thread is not full depth on cylinders with No. 2 rods. Minimum of three full threads available.

Table 2 - Rod Dimensions

Bore	Rod No.	Add Stroke LB	P	SA	XA	ZA
1½	1	4	2¼	6	5⅝	6
2	1	4	2¼	6	5⅝	6
2	3	4	2¼	6	6	6⅜
2½	1	4⅛	2⅜	6⅛	5¾	6⅛
2½	3	4⅛	2⅜	6⅛	6⅛	6½
3¼	1	4⅞	2⅝	7⅜	6⅞	7⅜
3¼	3	4⅞	2⅝	7⅜	7⅛	7⅝
4	1	4⅞	2⅝	7⅜	6⅞	7⅜
4	3	4⅞	2⅝	7⅜	7⅛	7⅝
5	1	5⅛	2⅞	7⅞	7¼	7⅞
5	3	5⅛	2⅞	7⅞	7½	8⅛
6	1	5¾	3⅛	8½	8	8⅝

Head Trunnion Mounting Style D (NFPA Style MT1)

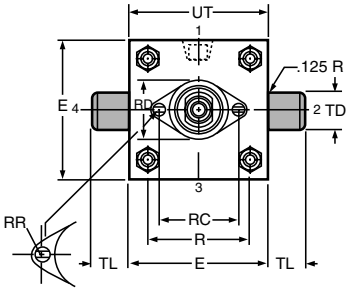

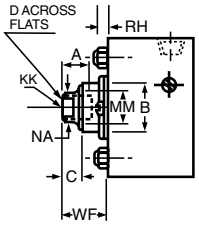

Style 9 Rod End
(NFPA SF)

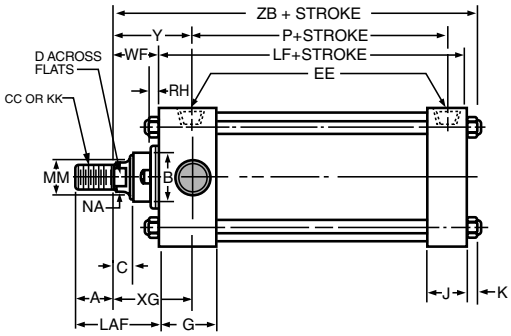

Style 4 & 8 Rod End
(NFPA SM & IM)

Cap Trunnion Mounting Style DB (NFPA Style MT2)

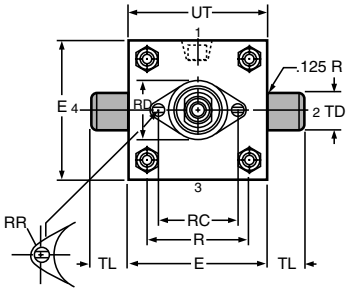

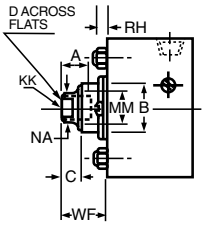

Style 9 Rod End
(NFPA SF)

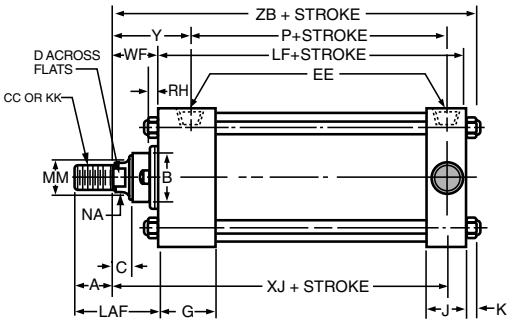

Style 4 & 8 Rod End
(NFPA SM & IM)

Intermediate Fixed Trunnion Mounting
Style DD (NFPA Style MT4)

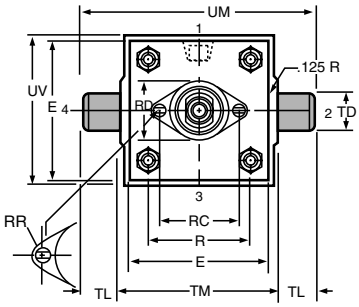

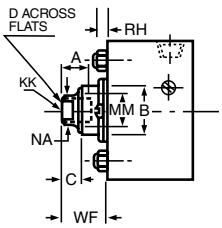

Style 9 Rod End
(NFPA SF)

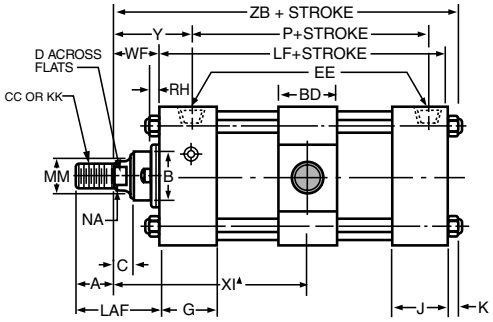

Style 4 & 8 Rod End
(NFPA SM & IM)

Note: For Rod End Dimensions see page 6.

Bore	Rod No.	Rod Dia. MM	Thread: Style 8 CC	Thread: Style 4 & 9 KK	Basic Envelope and Mounting Dimensions: BD	E	(NPTF) EE	G	J	K	+.000 TD -.001	TL	TM	UM	UT	UV	XG	Min. XI▲	Add Stroke: LF	P	XJ	ZB
1½	1	⅝	½-20	7/16-20	1¼	2	⅜	1½	1	¼	1.000	1	2½	4½	4	2½	1¾	3 3/16	3⅝	2¼	4⅛	4⅞
2	1 3	⅝ 1	½-20 ⅞-14	7/16-20 ¾-16	1½	2½	⅜	1½	1	5/16	1.000	1	3	5	4½	3	1¾ 2⅛	3 5/16 3 11/16	3⅝	2¼	4⅛ 4½	4 15/16 5 5/16
2½	1 3	⅝ 1	½-20 ⅞-14	7/16-20 ¾-16	1½	3	⅜	1½	1	5/16	1.000	1	3½	5½	5	3½	1¾ 2⅛	3 5/16 3 11/16	3¾	2⅜	4¼ 4⅝	5 1/16 5 7/16
3¼	1 3	1 1⅜	⅞-14 1¼-12	¾-16 1-14	2	3¾	½	1¾	1¼	⅜	1.000	1	4½	6½	5¾	4¼	2¼ 2½	4 3/16 4 7/16	4¼	2⅝	5 5¼	6 6¼
4	1 3	1 1⅜	⅞-14 1¼-12	¾-16 1-14	2	4½	½	1¾	1¼	⅜	1.000	1	5¼	7¼	6½	5	2¼ 2½	4 3/16 4 7/16	4¼	2⅝	5 5¼	6 6¼
5	1 3	1 1⅜	⅞-14 1¼-12	¾-16 1-14	2	5½	½	1¾	1¼	7/16	1.000	1	6¼	8¼	7½	6	2¼ 2½	4 3/16 4 7/16	4½	2⅞	5¼ 5½	6 5/16 6 9/16

▲ Dimension XI to be specified by customer

Basic Cylinder Style T (NFPA Style MX0)

Rod end Style 4 is standard per dimension KK. Styles 8 or 9 are optional at no extra charge. A high strength rod end stud is standard on Style 4 for all rod sizes.

For special rod ends such as non-standard threads, rod extensions, blanks, etc., specify Style 3 and furnish desired dimensions for KK, A and W or WF.

Please note A + W = LA, A + WF = LAF (Where F is the retainer thickness on a given mounting).

If rod end is not specified, Style 4 will be supplied.

See table on next page for 6" bore rod end dimensions.

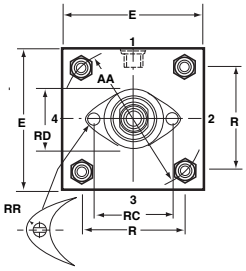

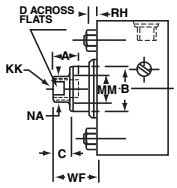

Style 9 Rod End
(NFPA SF)

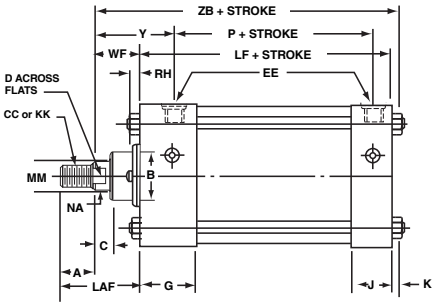

Style 4 & 8 Rod End
(NFPA SM & IM)

Tie Rod Mounted Styles TB, TC, TD

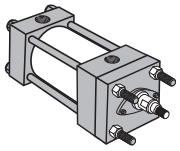

Style TB

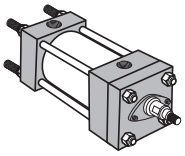

Style TC
NFPA (MX2)

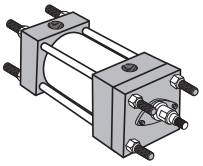

Style TD

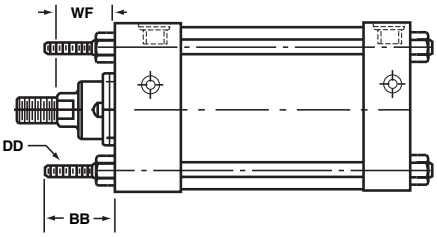

Style TB, Tie Rods Extended, is illustrated at right. Style TC, Cap Tie Rods Extended, and Style TD, Both Ends Tie Rods Extended, can be dimensioned from Style TB drawing.

Flange Mountings Styles H, J

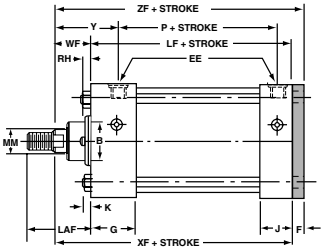

Style H (NFPA MF2)

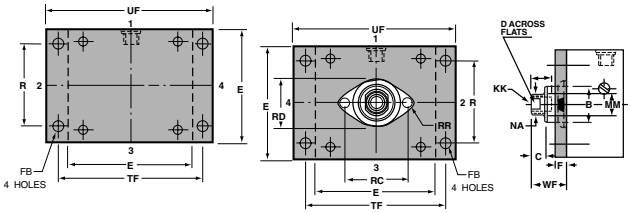

Style 9 Rod End (NFPA SF)

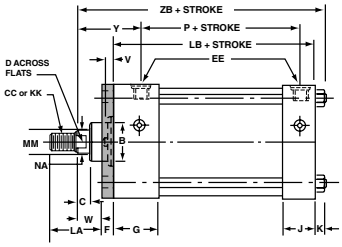

Style J (NFPA MF1)

Side Mountings Styles C, F

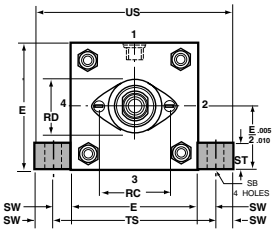

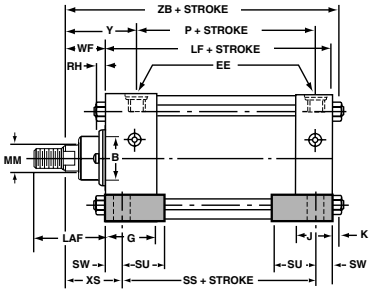

Style C (NFPA MS2)

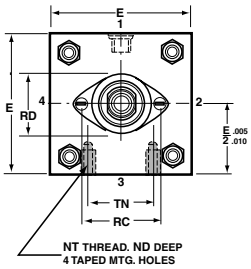

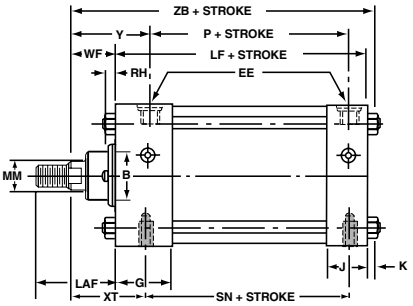

Style F (NFPA MS4)

Pivot Mountings Styles BB, BC

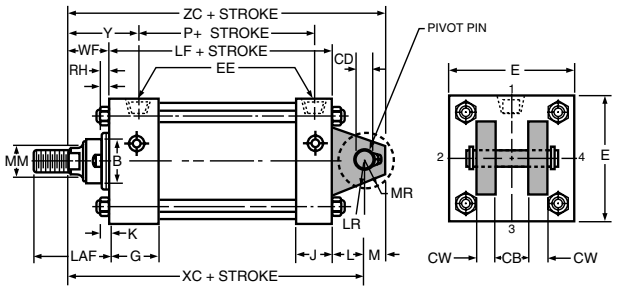

Style BB (NFPA MP1)

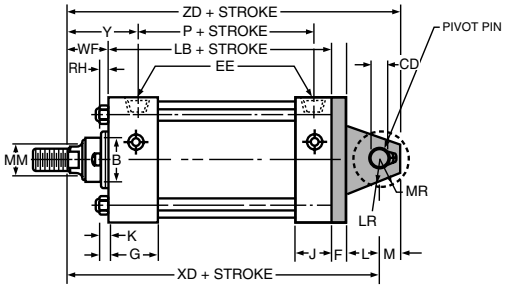

Style BC (NFPA MP2)

Trunnion Mountings Styles D, DB

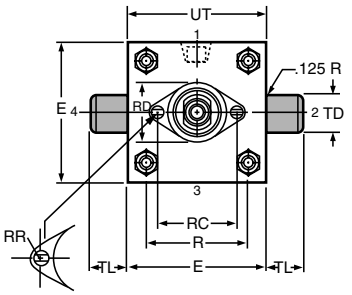

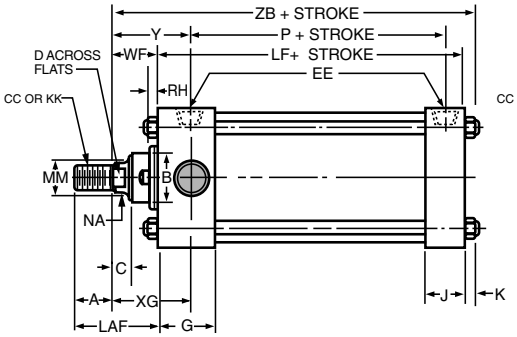

Style D (NFPA MT1)

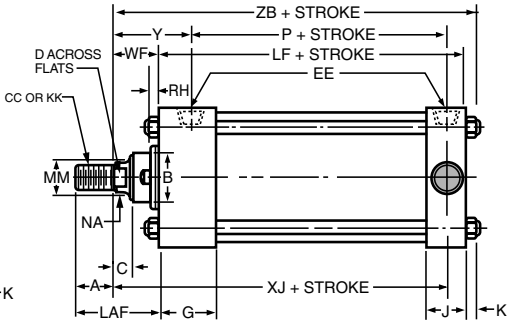

Style DB (NFPA MT2)

Trunnion Mounting Style DD

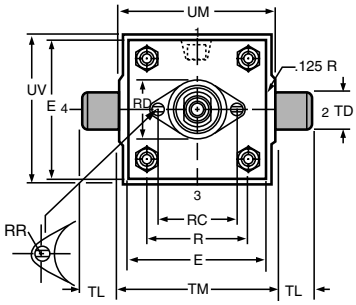

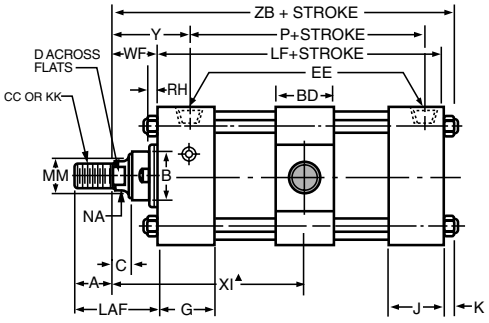

Style DD (NFPA MT4)

Table 3 Rod End Dimensions—Styles 9 (NFPA SF), 4 (NFPA SM) and 8 (NFPA IM)

Bore	Rod No.	Rod Dia. MM	Thread Style 8 CC	Thread Style 4 & 9 KK	A	+.000 -.002 B	MIN. C	D	LA	LAF	NA	RC	RD	RH	RR	V	W	WF	Y
6	1	1 3/8	1 1/4-12	1-14	1 5/8	1.874	5/8	1 1/8	2 1/2	3 1/4	1 5/16	2 11/16	2 15/64	7/32	13/64	1/4	7/8	1 5/8	2 13/16

Table 4 Basic Envelope and Mounting Dimensions

Bore	Rod No.	Rod Dia. MM	AA	BB	BD	CB	+.000 -.002 CD	CW	DD	E	(NPTF) EE	F	FB	G	J	K	L	LR	M	MR	ND	NT	R	SB•	ST	SU	SW
6	1	1 3/8	6.9	1 13/16	2 1/2	1 1/2	1.001	3/4	1/2-20	6 1/2	3/4	3/4	9/16	2	1 1/2	7/16	1 1/2	1 1/4	1	1 3/16	7/8	3/4-10	4.88	13/16	1	1 9/16	11/16

Basic Envelope and Mounting Dimensions (cont.)

Bore	Rod No.	Rod Dia. MM	+.000 TD -.002	TF	TL	TM	TN	TS	UF	UM	US	UT	UV	XG	MIN. XI ▲	ADD STROKE LB	LF	P	SN	SS	XC	XD	XF	XJ	XS	XT	ZB	ZC	ZF
6	1	1 3/8	1.375	7 5/8	1 3/8	7 5/8	3 1/4	7 7/8	8 5/8	10 3/8	9 1/4	9 1/4	7	2 5/8	4 15/16	5 3/4	5	3 1/8	3 1/8	3 5/8	8 1/8	8 7/8	6 5/8	5 7/8	2 5/16	2 13/16	7 1/16	9 1/8	7 3/8

• Upper surface spotfaced for socket head screws. ▲ Dimension XI to be specified by customer.

To dimension double rod cylinders, select the desired mounting style and refer to corresponding single rod model on pages 6-10. After obtaining necessary dimensions from that drawing, supplement those with the drawings and tables below.

Tie Rods Extended
Taiyo America Style KT

Tie Rods Extended Head End, Style **KTB.**

Tie Rods Extended Both Ends, Style **KTD.**

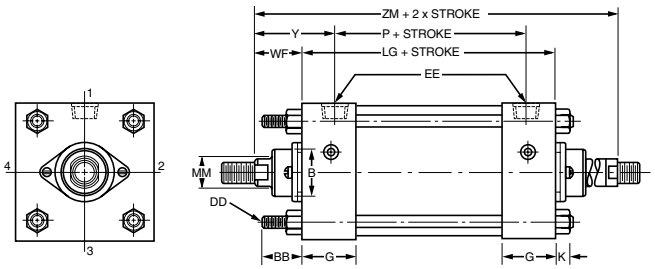

Side Lug Mounting
Taiyo America Style KC

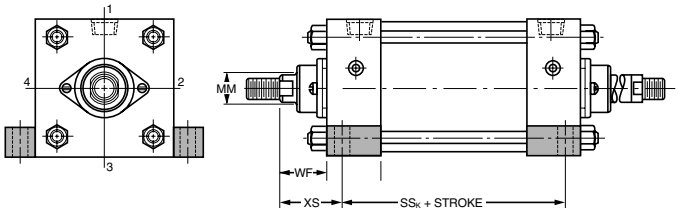

Side Tapped Mounting
Taiyo America Style KF

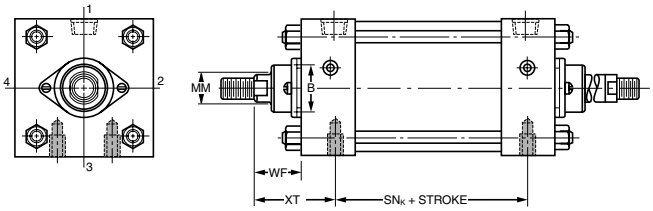

Rectangular Flange Mounting
Taiyo America Style KJ

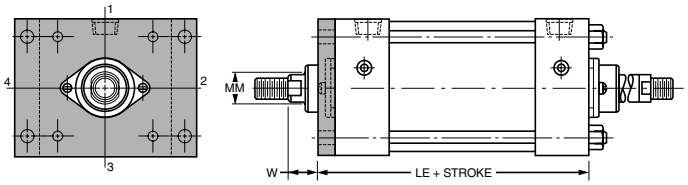

Head Trunnion Mounting
Taiyo America Style KD

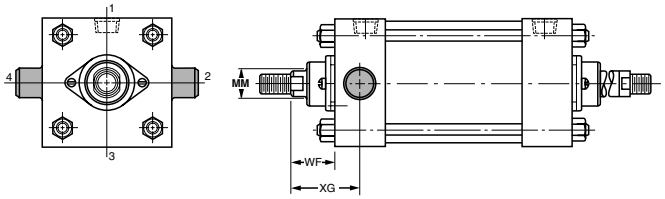

Intermediate Fixed Trunnion Mounting
Taiyo America Style KDD

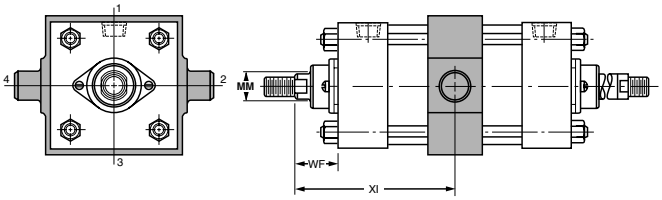

Double Rod Cylinder Dimensions

Bore	Rod Dia.	Rod No.	Add Stroke LG	Add Stroke LE	Add Stroke SSK	Add Stroke SNK	Add 2x Stroke ZM
1½	⅝	1	4⅛	4½	3⅜	2¼	6⅛
2	⅝	1	4⅛	4½	3⅜	2¼	6⅛
	1	3					6⅞
2½	⅝	1	4¼	4⅝	3½	2⅜	6¼
	1	3					7
3¼	1	1	4¾	5⅜	3¾	2⅝	7½
	1⅜	3					8
4	1	1	4¾	5⅜	3¾	2⅝	7½
	1⅜	3					8
5	1	1	5	5⅝	3⅝	2⅞	7¾
	1⅜	3					8¼
6	1⅜	1	5½	6¼	4⅛	3⅛	8¾
REPLACES DIMENSION			**LF**	**LB**	**SS**	**SN**	**–**
ON SINGLE ROD MOUNTING STYLES			**T, TB, TC, C, F, D & DD**	**J**	**C**	**F**	**ALL**

On a double rod cylinder where the two rod ends will be different, be sure to state very clearly which rod end is to go at which end of the cylinder.

NOTE: For Rod End Dimensions, see pages 6-10.

Theoretical Push and Pull Forces for Pneumatic Cylinders

Push Force and Displacement

Cyl. Bore Size (Inches)	Piston Area (Sq. In.)	Cylinder Push Stroke Force In Pounds At Various Pressures						Cu. Ft. Free Air At 80 Lbs. Pressure, Required To Move Max. Load 1 Inch
		25	50	65	80	100	200	
1 1/2	1.767	44	88	115	142	177	353	.00659
2	3.14	79	157	204	251	314	628	.01171
2 1/2	4.91	123	245	319	393	491	982	.01830
3 1/4	8.30	208	415	540	664	830	1660	.03093
4	12.57	314	628	817	1006	1257	2514	.04685
5	19.64	491	982	1277	1571	1964	3928	.07320
6	28.27	707	1414	1838	2262	2827	5654	.10541

Deductions for Pull Force and Displacement

Piston Rod Dia. (Inches)	Piston Area (Sq. In.)	Piston Rod Diameter Force In Pounds At Various Pressures						Cu. Ft. Free Air At 80 Lbs. Pressure, Required To Move Max. Load 1 Inch
		To determine Cylinder Pull Force or Displacement, deduct the following Force or Displacement corresponding to Rod Size, from selected Push Stroke Force or Displacement corresponding to Bore Size in table above.						
		25	50	65	80	100	200	
5/8	.307	8	15	20	25	31	61	.00659
1	.785	20	39	51	65	79	157	.01171
1 3/8	1.49	37	75	97	119	149	298	.01830

General Formula

The cylinder output forces are derived from the formula:

$$F = P \times A$$

Where F = Force in pounds.
P = Pressure at the cylinder in pounds per square inch, gauge.
A = Effective area of cylinder piston in square inches.

Free Air refers to normal atmospheric conditions of the air at sea level (14.7 psi). Use above cu. ft. free air required data to compute CFM required from a compressor at 80 psi. Cu. ft. of free air required at other pressures can be calculated using formula below.

$$V_1 = \frac{(P_2 + 14.7)\, V_2}{14.7}$$

Where V_1 = Free air consumption per inch of stroke (cubic feet).
V_2 = Cubic feet displaced per inch of stroke.
P_2 = Gauge pressure required to move maximum load.

Stop Tubing

Stop tube is recommended to lengthen the distance between the gland and piston to reduce bearing loads when the cylinder is fully extended. This is especially true of horizontally mounted and long stroke cylinders. Long stroke cylinders achieve additional stability through the use of a stop tube.

When specifying cylinders with long stroke and stop tube, be sure to call out the net stroke and the length of the stop tube. Machine design can be continued without delay by laying in a cylinder equivalent in length to the NET STROKE PLUS STOP TUBE LENGTH, which is referred to as GROSS STROKE.

Refer to piston rod/stroke selection chart to determine stop tube length.

Drawing A

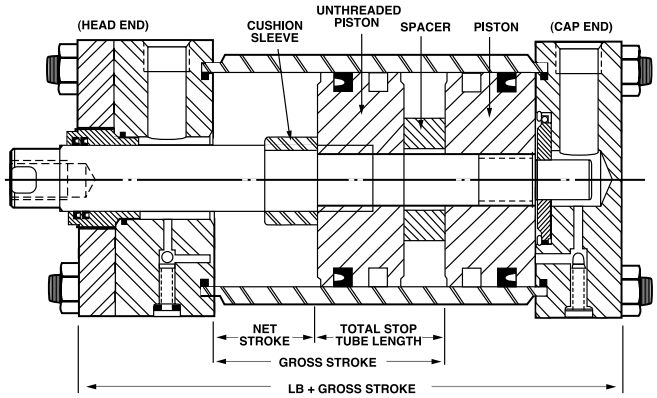

Double piston design is supplied on air cylinders with cushion head end or both ends.

Drawing B

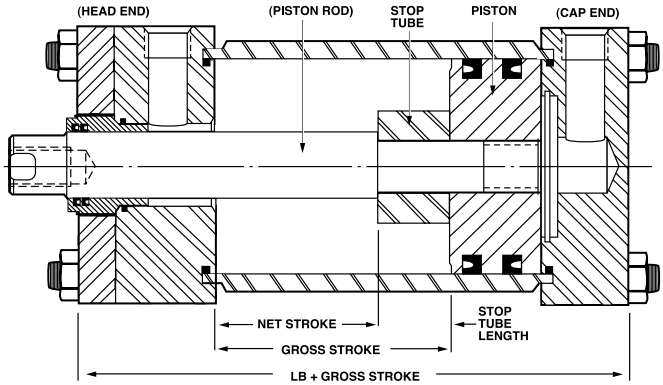

This design is supplied on all non cushion cylinders.

Mounting Classes

Standard mountings for fluid power cylinders fall into three basic groups. The groups can be summarized as follows:

Group 1 – Straight Line Force Transfer with fixed mounts which absorb force on cylinder centerline.

Group 2 – Pivot Force Transfer. Pivot mountings permit a cylinder to change its alignment in one plane.

Group 3 – Straight Line Force Transfer with fixed mounts which do not absorb force on cylinder centerline.

Because a cylinder's mounting directly affects the maximum pressure at which the cylinder can be used, the chart below should be helpful in selection of the proper mounting combination for your application. Stroke length, piston rod connection to load, extra piston rod length over standard, etc., should be considered for thrust loads. Alloy steel mounting bolts are recommended for all mounting styles, and thrust keys are recommended for Group 3.

Group 1 FIXED MOUNTS which absorb force on cylinder centerline.	
	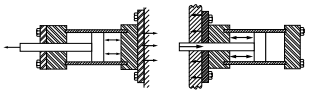
Heavy-Duty Service For Thrust Loads For Tension Loads	 Mtg. Style TC Mtg. Style JB
Medium -Duty Service For Thrust Loads For Tension Loads	 Mtg. Style H Mtg. Style J
Light-Duty Service For Thrust Loads For Tension Loads	 Mtg. Style J Mtg. Style H
Group 2 PIVOT MOUNTS which absorb force on cylinder centerline.	
	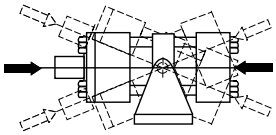
Heavy-Duty Service For Thrust Loads For Tension Loads	 Mtg. Styles DD, D Mtg. Styles BB, DD, D, DB
Medium-Duty Service For Thrust Loads For Tension Loads	 Mtg. Style BB Mtg. Style BB
Light-Duty Service For Thrust Loads For Tension Loads	 ———————— ————————
Group 3 FIXED MOUNTS which do not absorb force on the centerline.	
	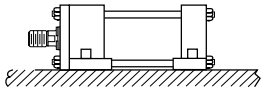
Heavy-Duty Service For Thrust Loads For Tension Loads	 Mtg. Style C Mtg. Style C
Medium-Duty Service For Thrust Loads For Tension Loads	 Mtg. Style F Mtg. Style F

Piston Rod — Stroke Selection Chart

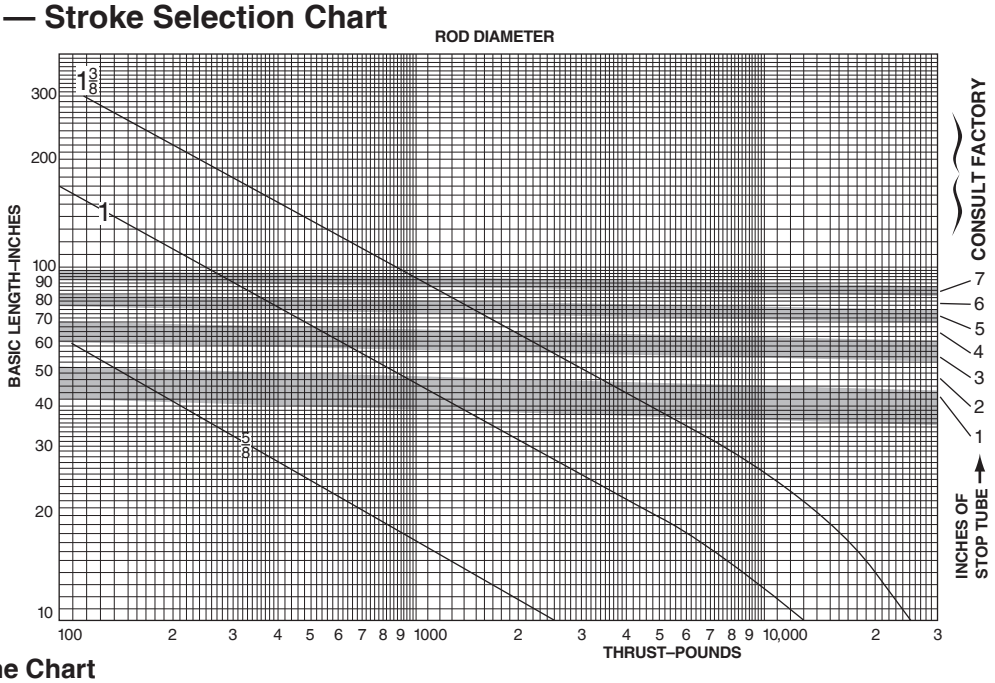

How to Use the Chart

The selection of a piston rod for thrust (push) conditions requires the following steps:

1. Determine the type of cylinder mounting style and rod end connection to be used. Then consult the chart below and find the "stroke factor" that corresponds to the conditions used.
2. Using this stroke factor, determine the "basic length" from the equation:

   Basic Length = Actual Stroke x Stroke Factor

   The graph is prepared for standard rod extensions beyond the face of the gland retainers. For rod extensions greater than standard, add the increase to the stroke in arriving at the "basic length."
3. Find the load imposed for the thrust application by multiplying the full bore area of the cylinder by the system pressure.
4. Enter the graph along the values of "basic length" and "thrust" as found above and note the point of intersection:
   A) The correct piston rod size is read from the diagonally curved line labeled "Rod Diameter" next *above* the point of intersection.
   B) The required length of stop tube is read from the right of the graph by following the shaded band in which the point of intersection lies.
   C) If required length of stop tube is in the region labeled "consult factory," submit the following information for an individual analysis:
      1) Cylinder mounting style.
      2) Rod end connection and method of guiding load.
      3) Bore, required stroke, length of rod extension (Dim. "W or WF") if greater than standard, and series of cylinder used.
      4) Mounting position of cylinder. (Note: If at an angle or vertical, specify direction of piston rod.)
      5) Operating pressure of cylinder if limited to less than standard pressure for cylinder selected.

Warning ⚠

Piston rods are not normally designed to absorb bending moments or loads which are perpendicular to the axis of piston rod motion. These additional loads can cause the piston rod end to fail. If these types of additional loads are expected to be imposed on the piston rods, their magnitude should be made known to our Engineering Department so they may be properly addressed. Additionally, cylinder users should always make sure that the piston rod is securely attached to the machine member.

Recommended Mounting Styles for Maximum Stroke and Thrust Loads	Rod End Connection	Case	Stroke Factor
Groups 1 or 3 Long stroke cylinders for thrust loads should be mounted using a heavy-duty mounting style at one end, firmly fixed and aligned to take the principal force. Additional mounting should be specified at the opposite end, which should be used for alignment and support. An intermediate support may also be desirable for long stroke cylinders mounted horizontally. See catalog page No. 80 under "Tie Rod Supports Rigidity of Envelope" for a guide. Machine mounting pads can be adjustable for support mountings to achieve proper alignment.	Fixed and Rigidly Guided	I 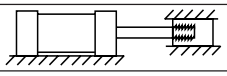	.50
	Pivoted and Rigidly Guided	II 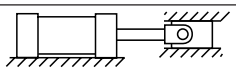	.70
	Supported but not Rigidly Guided	III 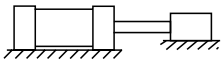	2.00
Group 2 Style D — Trunnion on Head	Pivoted and Rigidly Guided	IV 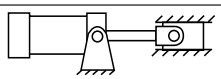	1.00
Style DD — Intermediate Trunnion	Pivoted and Rigidly Guided	V 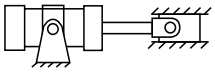	1.50
Style DB — Trunnion on Cap or Style BB — Clevis on Cap	Pivoted and Rigidly Guided	VI 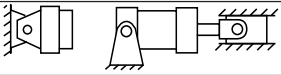	2.00

How to Order Series U250 / U250N Cylinders

When ordering Series U250 / U250N cylinders, please review the following:

Note: Duplicate cylinders can be ordered by giving the SERIAL NUMBER from the nameplate of the original cylinder. Factory records supply a quick positive identification.

Piston Rods: Specify rod code number based on diameter. Give thread style number for a standard thread or specify dimensions. See “Style 3 Rod End” below.

Cushions: If cushions are required specify according to the model number on the next page. If the cylinder is to have a double rod and only one cushion is required, be sure to specify clearly which end of the cylinder is to be cushioned.

Special Modifications: Additional information is required on orders for cylinders with special modifications. This is best handled with descriptive notes. For further information, consult factory.

Fluid Medium: Series U250 / U250N pneumatic cylinders are equipped with seals for use with lubricated air. Series U250 / U250N pneumatic cylinders are equipped for use with filtered dry air.

Class 1 Seals

Class 1 seals are the seals provided as standard in a cylinder assembly unless otherwise specified. For further information on temperature compatibility or operating limitations of all components, see standard specifications on page 3.

For the U250 / U250 N series cylinders the following make-up Class 1 Seals:

Primary Piston Rod Seal – Nitrile with PTFE back-up washers
Piston Rod Wiper – Nitrile
Piston Seals – Nitrile with polymyte back-up washers

Combination Mountings

Single Rod End The first mounting is the one called out on the head end of the cylinder. The second or subsequent mountings are called out as they appear in the assembly moving away from the rod end. Exception: When tie rod mountings are part of a combination, the model number should contain an “S” (Special) in the model code and a note in the body of the order clarifying the mounting arrangement. The ”P” is used to define a thrust key and is not considered to be a mounting. However, it is located at the primary end.

Example: 4.00 CCBBU250LUS14AC x 10.000

Combination “C” mounting head only. “BB” mounting cap end This cylinder is also cushioned at both ends.

Double Rod End In general, the model number is read left to right corresponding to the cylinder as viewed from left to right with the primary end at rod end #1. See Double Rod Models information page in this section. For this option the piston rod number, piston rod end, and piston rod threads are to be specified for both ends. The simplest are for symmetric cylinders such as: TD, C and F mounts. All other mounting styles, the description of the first rod end will be at the mounting end. In the case of multiple mounts, the description of the first rod end will be at the primary mounting end. For “DD” mounts, the description of the first rod end will be the same location as the “XI” dimension.

Example: 4.00 KDDMA/SBU250LU24A/18A x 10.000 XI=8

This is a center trunnion mounting cylinder with the XI dimension measured from the code 2 rod side of the cylinder which has the style 4 thread. The opposite end code 1 rod with the style 8 thread.

Style 3 Rod End

A style 3 rod end indicates a special rod end configuration. All special piston rod dimensions must have **all three:** KK, A and W or WF specified with the rod fully retracted.

Please note A + W = LA, A + WF = LAF (Where F is the retainer thickness on a given mounting).

A sketch or drawing should be submitted for rod ends requiring special machining such as snap ring grooves, keyways, tapers, multiple diameters, etc. It is good design practice to have this machining done on a diameter at least 0.065 inches smaller than the piston rod diameter. This allows the piston rod to have a chamfer preventing rod seal damage during assembly or maintenance.

Service Policy

On cylinders returned to the factory for repairs, it is standard policy for the Cylinder Division to make such part replacements as will put the cylinder in as good as new condition. Should the condition of the returned cylinder be such that expenses for repair would exceed the costs of a new one, you will be notified.

Address all correspondence and make shipments to, Service Department at your nearest regional plant listed in the pages of this catalog.

Certified Dimensions

Taiyo America Cylinder Division guarantees that all cylinders ordered from this catalog will be built to dimensions shown. All dimensions are certified to be correct, and thus it is not necessary to request certified drawings.

Series U250 / U250N Model Numbers – How to Develop and "Decode" Them

Taiyo America Series U250 / U250N cylinders can be completely and accurately described by a model number consisting of coded symbols. To develop a model number, select only those symbols that represent the cylinder required, and place them in the sequence indicated below.

Example

5" C K F – U250 L U S 1 4 2 A C x 12"

Feature	Description	Symbol
Bore	Specify in inches	—
Cushion Head	Used **only** if cushion head is required	C
Double Rod	Used **only** if double rod cylinder is required	K
Mounting Style	Basic Cylinder	T
	Head Tie Rods Extended	TB
	Cap Tie Rods Extended	TC
	Both End Tie Rods Extended	TD
	Head Rectangular Flange	J
	Cap Rectangular Flange	H
	Side Lug	C
	Side End Angles	CB
	Side Tapped	F
	Cap Fixed Clevis	BB
	Cap Detachable Clevis	BC
	Head Trunnion	D
	Cap Trunnion	DB
	Intermediate Fixed Trunnion	DD
Series	Required in all MA Model Numbers	U250 U250N
Piston	Lipseal™ Piston standard.	L
Ports	NPTF (Dry Seal) Ports are standard.	U
Seals	Standard Seals (Class 1) Fluorocarbon Seals (Class 5) Fluorocarbon Rod Seals only	— V E
Special Modifications	Used **only** if special modifications are required:	S
	Oversize Ports	
	Port Position Change	
	Stop Tube•	
	Stroke Adjuster	
	Fluorocarbon Seals	
Piston Rod Number	For Single Rod Cylinders, Select only one. Check Cylinder Stroke page for minimum piston rod diameter chart.	1 3
	Non-rotating	G
Piston Rod End	Select:	
	Style 4 Small Male	4
	Style 8 Intermediate Male	8
	Style 9 Short Female	9
	Style 3 Special (Specify)	3
Piston Rod Alternate Threads	Used **only** for two times longer than standard.	2
Piston Rod Threads	UNF Standard Metric	A M
Cushion Cap	Used **only** if cushion cap is required	C
Stroke•	Specify in inches	–

Use symbol S to designate any special modification except piston rod end

Styles 4, 8 & 9 are catalog standards
Specify Style 3 for any special piston rod end

Double Rod Cylinders

For double rod cylinders, specify rod number and rod end symbols for both piston rods. A typical double rod model number would be:

6" KJ-U250LU14A/14AX12"

* Required for Basic Cylinder Model Number

• In case of stop tube, call out gross stroke length.

Dark Arrows Indicate Basic Minimum Model Number.

Cylinder serial numbers are factory production record numbers and are assigned to each cylinder, in addition to the model number.

Magnetically Actuated Switches

The U250 / U250N adjustable switch has been designed for use on Series U250 / U250N Pneumatic Cylinders. It is a normally open switch. The compact design of the switch causes a minimum interference with cylinder envelope dimensions. The U250 / U250N switch will sense the magnetic piston through a non-ferrous cylinder barrel. Several U250 / U250N switches may be mounted on a single cylinder to control or sequence several functions.

The U250 / U250N switch is mounted on a single tie rod with an aluminum extrusion for easy adjustment. Its rugged construction will provide millions of trouble free cycles. It is ideally suited as an input to programmable controllers or to activate an industrial relay.

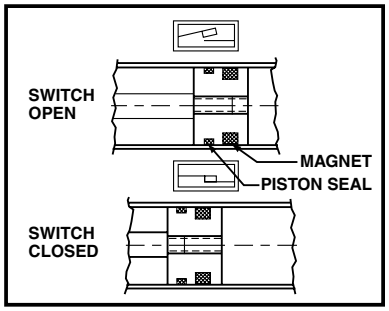

Switch Specifications

	Reed Switch Assembly MAR-2 L074480000	Solid State Switch Assembly MAS-3 PNP Sourcing L074490000 MAS-4 NPN Sinking L074500000
Switching Logic	Normally Open, SPST	NPN or PNP
Supply Voltage Range	5 to 125 V AC/DC	5 TO 30 VDC
Max. Switching Power	10 Watts (Resistive) 5 Watts (Inductive)	6 Watts
Max. Switching Current	300 mA (Resistive) 150 mA (Inductive)	200 mA at 24 VDC
Circuit Current Consumption	—	Max 14 mA at 24 VDC
Short Circuit Interruption Current	—	370 mA
Leakage Current	—	10 µA Maximum
Residual Voltage	Maximum 3 V	1.5 V Maximum
"On" State Voltage Drop	1.7V Maximum	See Below
Response	1000 Hz Maximum	1000 Hz Maximum
Shock Resistance	30G Non-Repeated Shock	30G Non-Repeated Shock

	Reed Switch Assembly MAR-2 L074480000	Solid State Switch Assembly MAS-3 PNP Sourcing L074490000 MAS-4 NPN Sinking L074500000
Degree Of Protection	IEC IP 67	IEC IP 67
Operating Temperature	14° to 140°F (-10° to 60°C)	14° to 158°F (-10° to 70°C)
Storage Temperature	-4° to 158°F (-20° to 70°C)	-4° to 176°F (-20° to 80°C)
LED Indicator	Red, Target Present When On	Red, Target Present When On
Minimum Current To Light LED	18 mA	1 mA
Lead Wire Lengths	39 Inches, 1 Meter	39 Inches, 1 Meter

[1] Polarity is restricted to DC operation: (+) to Brown (-) to Blue

If these connections are reversed the contacts will close, but the LED will not light.

Circuits

Reed Switch (MAS-2)

Part No. L074480000

NOTE: Polarity must be observed for DC operation only.

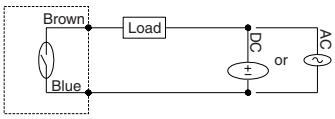

NPN Sinking Output (MAS-4)

Part No.	L074500000
Color of Cable	Black
"On" State Voltage Drop	0.7V Maximum

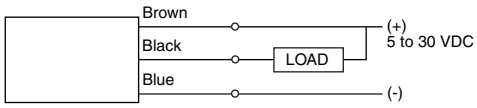

PNP Sourcing Output (MAS-3)

Part No.	L074490000
Color of Cable	Gray
"On" State Voltage Drop	0.2V Maximum

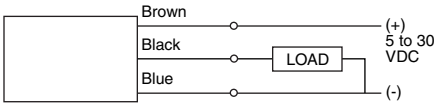

Circuit for Switching Contact Protection (Inductive Loads)

(Required for proper operation 24V DC)

Put Diode parallel to loads following polarity as shown below.

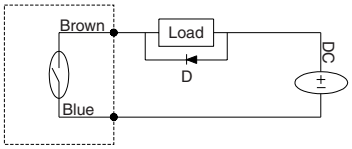

D: Diode: select a Diode with the breakdown voltage and current rating according to the load.

Typical Example—100 Volt, 1 Amp Diode
Load: Relay coil (under 0.5W coil rating)
(Recommended for longer life 125 VAC)

Put a resistor and capacitor in parallel with the load. Select the resistor and capacitor according to the load.

Typical Example:
Load: Relay coil (under 2W coil rating)
R: Resistor 1 KΩ - 5 KΩ, 1/4 W
C: Capacitor 0.1 µF, 600 V

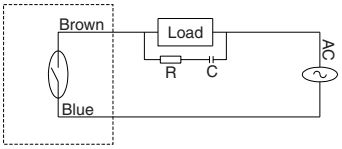

⚠ Caution

- Use an ampmeter to test reed switch current. Testing devices such as incandescent light bulbs may subject the reed switch to high in-rush loads.
- **NOTE:** When checking an unpowered reed switch for continuity with a digital ohmmeter the resistance reading will change from infinity to a very large resistance (2 M ohm) when the switch is activated. This is due to the presence of a diode in the reed switch.
- Anti-magnetic shielding is recommended for reed switches exposed to high external RF or magnetic fields.
- The magnetic field strength of the piston magnet is designed to operate with our switches. Other manufacturers' switches or sensors may not operate correctly in conjunction with these magnets.
- Current capabilities are relative to operational temperatures.
- Use relay coils for reed switch contact protection.
- The operation of some 120 VAC PLC's (especially some older Allen-Bradley PLC's) can overload the reed switch. The switch may fail to release after the piston magnet has passed. This problem may be corrected by the placement of a 700 to 1K OHM resistor between the switch and the PLC input terminal. Consult the manufacturer of the PLC for appropriate circuit.
- Switches with long wire leads (greater than 15 feet) can cause capacitance build-up and sticking will result. Attach a resistor in series with the reed switch (the resistor should be installed as close as possible to the switch). The resistor should be selected such that R (ohms) >E/0.3.

U250 / U250N Switch Mounting Data

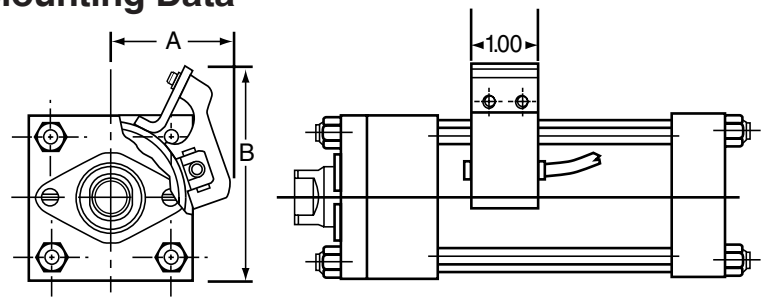

Bore	A	B	PISTON TRAVEL AT MIDSTROKE (SWITCH ON) (±.01)	MINIMUM ACTIVATION DISTANCE FROM END OF STROKE	
				Head	Cap
1½	1.90	2.71	.37	.20	.20
2	2.10	3.25	.37	.20	.20
2½*	2.20	3.60	.37	.13	.13
3¼*	2.70	4.25	.37	.13	.13
4*	2.90	4.90	.37	.13	.13
5*†	3.20	5.85	.37	0	0
6*†	3.82	6.70	.37	0	0

NOTE:
* To maintain minimum activation distance switch can only be mounted with "LED" against end plate because of cable interference on 'End of Stroke' applications.

† On 5.0" and 6.0" bore cylinders, end of stroke activation will occur without the switch physically touching the head or cap.

Standard U250 / 250 BN Switch Assembly

Consists of:

1. 0106280032 (2) #8-32 Sh. Cap Screw
2. 0108850008 (2) Lockwasher
3. 0854530000 (1) Bracket Clamp
4. (1) Switch & Bracket Sub-Assembly
   MAR-2 – 0862580000
   MAS-3 – 0862590000
   MAS-4 – 0862600000

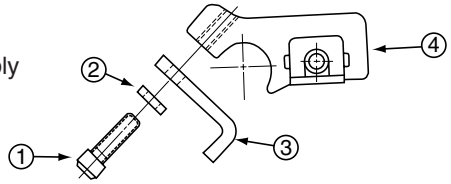

How to Order:

U250 / U250N switches are not mounted to the cylinder prior to shipment. When ordering a cylinder to accommodate an U250 / U250N switch:

1. Derive a proper model number.
2. Place an "S" in the special features column.
3. Underneath the model number specify:
   1) Cylinder prepared for U250 / U250N switch.
4. As a separate item specify the number of switch assemblies required.

Example: To order a 2½" x 10" U250 / U250N cylinder with U250 / U250N switches to sense the end of stroke at both the head and cap end specify:

Item	Qty.	Description
A	(1)	2.50 C J U250LUS 14A C x 10.000 (1) Cylinder prepared for U250 / U250N Switch
B	(2)	(*) Switch Assemblies

* #L074480000 – MAR-2
#L074490000 – MAS-3
#L074500000 – MAS-4

Magnet Actuated Switches with Quick Connect

Magnet Actuated Switches are available for Series U250 / U250N cylinders. Refer to the appropriate Catalog information for electrical specifications on each switch. The standard lead wire length is 39" (1 meter).

Switches for the above cylinders are also offered with a 6 (six) inch lead with a male quick connect option.

Quick Connect Option

(Switch shown without mounting brackets)

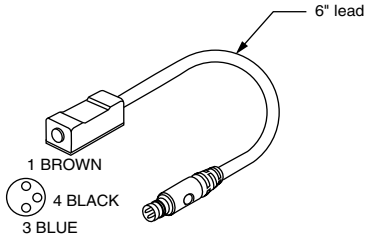

Switches with 6" Lead and Quick Connect Male End

Series	Reed	NPN Sinking	PNP Sourcing
U250/U250N	L07448000C	L07450000C	L07449000C

Switches are supplied with the bracket to mount the switch to the cylinder. Refer to the switch information for each series for bracket dimensions.

Cordset with Female Quick Connect (Order Separately)

A female connector is available for all switches with the male quick connect option. The male plug will accept a snap-on or threaded connector. Cylinder Division cordset part numbers and other manufacturer's part numbers are listed below:

Manufacturer	Snap-On Version	Threaded Version
Taiyo America	086620S005	086620T005

Cordset Specification:

Connector:	Oil resistant polyurethane body material, PA 6 (Nylon) contact carrier, spacings to VDE 0110 Group C, (150 VAC / DC)
Contacts:	Gold plated beryllium copper, machined from solid stock
Coupling Method:	Snap-Lock or chrome plated brass nut
Cord Construction:	Oil resistant black PUR jacket, non-wicking, non-hygroscopic, 300V. Cable end is stripped and tinned.
Conductors:	Extra high flex stranding, PVC insulation
Temperature:	-40° to 185°F (-40° to 85°C)
Protection:	NEMA 1, 3, 4, 6P and IEC IP67
Cable Length:	6.56 ft (2m) or 16.4 ft (5m)

Snap-On Straight Plug

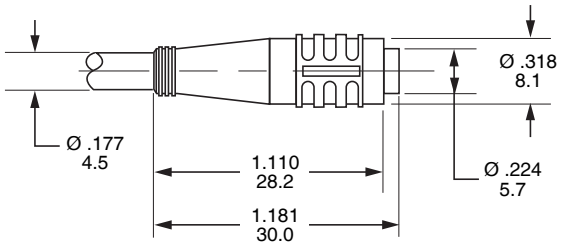

Threaded Straight Plug

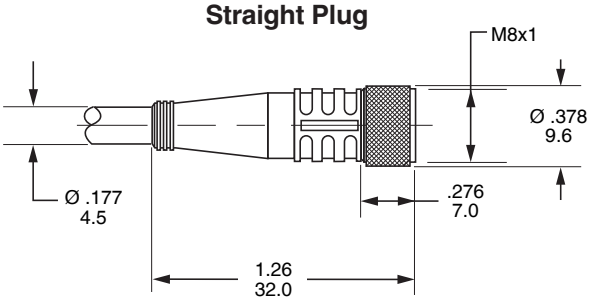

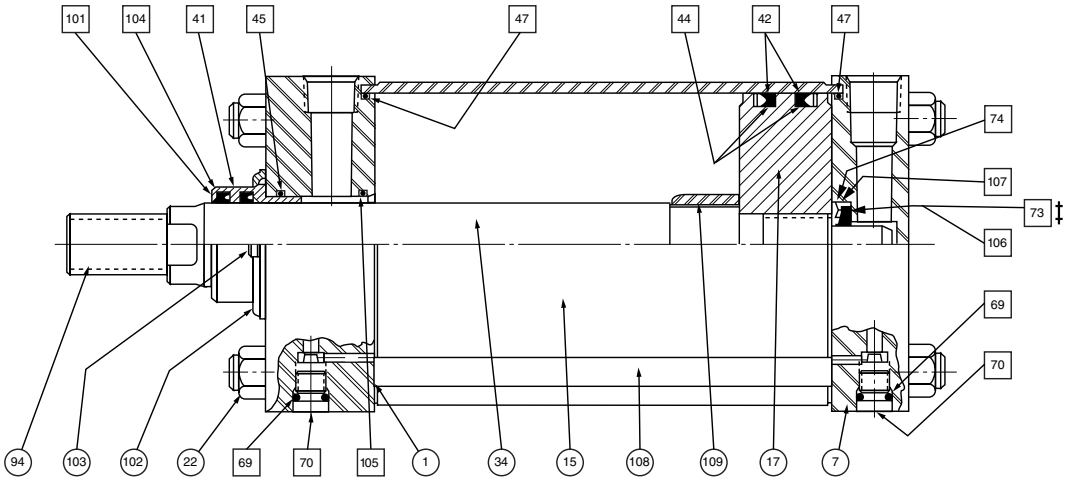

‡on 6" Bore only Sym. 73 is used in place of Sym. 106 and 107.

Seal Kits

Seals for Series U250 / U250N cylinders are available in kit form. For prompt delivery and complete information, contact your local Taiyo America Cylinder distributor.

Seal kits contain seals of nitrile (Buna-N) elastomers, the same as original seals installed in Series U250 / U250N cylinders. They are recommended when air is the operating medium. Normal operating temperature range is -10°F. to +165°F.

Gland and rod seal replacement parts are identified as Symbol RG – Rod Gland Cartridge Kit. A complete seal kit for noncushion cylinder is identified as Symbol SK – Seal Kit. Cushion kits are available for head or cap end and should be order as required.

Replacement parts can be identified from list below. To order specify bore, stroke, model number and serial number shown on cylinder name plate. Order seal kits from table on the following page.

Basic Cylinder Parts Identification

Sym.	Part Name
1	Head
7	Cap
15	Cylinder Body
17	Piston
22	Tie Rod Nut
34	Piston Rod
41	Lipseal Rod Gland
42	Lipseal, Piston
44	Back-up washer, Piston
45	O-Ring, Gland to Head
47	O-ring, End Seal
69	O-Ring, Cush. Adj.
70	Needle, Cush. Adj.
73	Bushing, Cushion
74	Retaining Ring
94	Stud, Rod End
101	Gland
102	Retainer
103	Screw, Retainer
104	Wiper, Rod
105	Check Seal, Rod End
106	Check Seal, Cap End
107	Washer, Seal
108	Tie Rod
109	Cushion Sleeve

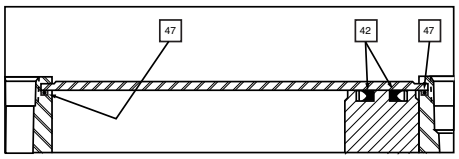

Seal Kit
(Sym. SK)

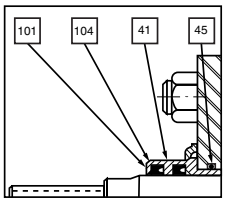

Rod Gland
Cartridge Kit
(Sym. RG)

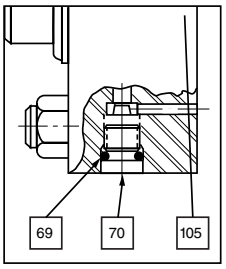

Head End
Cushion Kit
(Sym. CH)

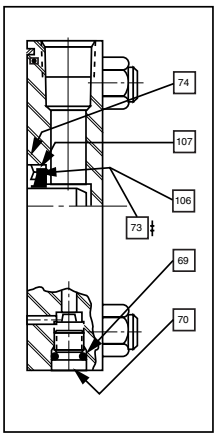

Cap End
Cushion Kit
(Sym. CC)

Bore Size	Tie Rod Nut Torque* Series U250 / U250N Cylinders			
	Steel Tube Tie Rod Nut Torque		Aluminum Tube Tie Rod Nut Torque	
1 1/2	60 in.-lbs.	69 cm-kg	20 in.-lbs.	23 cm-kg
2	11 ft.-lbs.	15 N.m	72 in.-lbs.	83 cm-kg
2 1/2	11 ft.-lbs.	15 N.m	72 in.-lbs.	83 cm-kg
3 1/4	25 ft.-lbs.	34 N.m	18 ft.-lbs.	24 N.m
4	25 ft.-lbs.	34 N.m	18 ft.-lbs.	24 N.m
5	60 ft.-lbs.	81 N.m	37 ft.-lbs.	50 N.m
6	60 ft.-lbs.	81 N.m	37 ft.-lbs.	50 N.m

* (-0%, +5% tolerance) When assembling the cylinder, be sure to torque the tie rods evenly.

Service Kits & Replacement Parts for Series U250 / U250N Cylinders

Seal Kits

Bore Size	Rod Dia.	Rod No.	SKL Seal Kits		SK Magnetic Seal Kits	
			Series U250	Series U250N	Series U250	Series U250N
			Consisting of: 1 ea. Symbol # 41, 45, 104, & 2 ea. Symbol # 42 & 47	Consisting of: 1 ea. Symbol # 41, 45, 104, & 2 ea. Symbol # 42, 47, 129 & 130	Consisting of: 1 ea. Symbol # 41, 43, 45, 104,121 & 2 ea. Symbol # 42, & 47; plus 1 ea. Quad Seal for old design.	
				Service Class 1 Only	Service Class 1 Only	
			Part Number	Part Number	Part Number	Part Number
1 1/2"	5/8"	1	SKL7000MA*	SKL7000MAN	SKM7000MA1	SKM7000MAN
2"	5/8"	1	SKL7001MA*	SKL7001MAN	SKM7001MA1	SKM7001MAN
	1"	3	SKL7002MA*	SKL7002MAN	SKM7002MA1	SKM7002MAN
2 1/2"	5/8"	1	SKL7003MA*	SKL7003MAN	SKM7003MA1	SKM7003MAN
	1"	3	SKL7004MA*	SKL7004MAN	SKM7004MA1	SKM7004MAN
3 1/4"	1"	1	SKL7005MA*	SKL7005MAN	SKM7005MA1	SKM7005MAN
	1 3/8"	3	SKL7006MA*	SKL7006MAN	SKM7006MA1	SKM7006MAN
4"	1"	1	SKL7007MA*	SKL7007MAN	SKM7007MA1	SKM7007MAN
	1 3/8"	3	SKL7008MA*	SKL7008MAN	SKM7008MA1	SKM7008MAN
5"	1"	1	SKL7009MA*	SKL7009MAN	SKM7009MA1	SKM7009MAN
	1 3/8"	3	SKL7010MA*	SKL7010MAN	SKM7010MA1	SKM7010MAN
6"	1 3/8"	1	SKL7098MA*	SKL7098MAN	SKM7098MA1	SKM7098MAN

* Ten (10) full digits are required to complete these part numbers. Replace asterisk (*) with Service Class #1 or #5 as required for series U250 non-magnetic cylinders. Service class 1 only for Series U250 and magnetic piston cylinders.

Rod Gland Seal Kits & Cushion Kits

Bore Size	Rod Dia.	Rod No.	Rod Gland Cartridge Kits		Cushion Kits	
			Series U250	Series U250N	Series U250 & U250N	
			Consisting of: 1 each Symbol # 41, 45, 101 & 104	Consisting of: 1 ea. Sym. # 41, 45, 101, 104, 131 & 132	Contains: 1 each Symbol # 69, 70 & 105	Contains: 1 each Symbol # 69, 70, 74, 106 & 107
					Service Class 1 Only**	
				Service Class 1 Only	Head End (CH)	Cap End (CC) ***
			Part Number	Part Number	Part Number	Part Number
1 1/2"	5/8"	1	RGL6948MA*	L070850040	CHL7011MA1	CCL7016MA1
2"	5/8"	1			CHL7012MA1	
	1"	3	RGL6949MA*	L070850100	CHL7013MA1	
2 1/2"	5/8"	1	RGL6948MA*	L070850040	CHL7012MA1	
	1"	3	RGL6949MA*	L070850100	CHL7013MA1	
3 1/4"	1"	1	RGL6950MA*	L070850124	CHL7014MA1	CCL7017MA1
	1 3/8"	3			CHL7015MA1	
4"	1"	1	RGL6949MA*	L070850100	CHL7014MA1	
	1 3/8"	3	RGL6950MA*	L070850124	CHL7015MA1	
5"	1"	1	RGL6949MA*	L070850100	CHL7014MA1	
	1 3/8"	3	RGL6950MA*	L070850124	CHL7015MA1	
6"	1 3/8"	1			CHL7170MA1	CCL7171MA1

* Ten (10) full digits are required to complete these part numbers. Replace asterisk (*) with Service Class #1 or #5 as required.
** For Class 5 consult factory.
*** 6" bore cap end cushion (CC) kit contains 1 each symbol # 69, 70, 73 & 74.

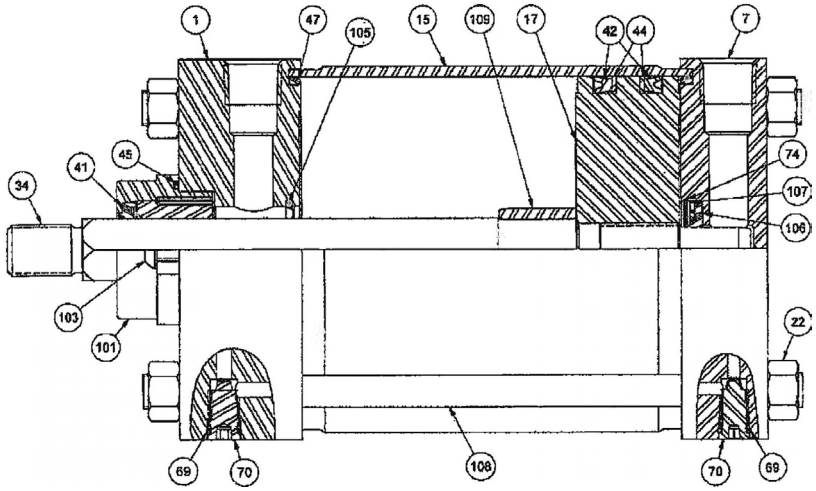

Non-Rotating Seal Kits

Seals for Series U250 / U250N cylinders are available in kit form. For prompt delivery and complete information, contact your local Taiyo America Cylinder distributor.

Seal kits contain seals of nitrile (Buna-N) elastomers, the same as original seals installed in Series U250 / U250N cylinders. They are recommended when air is the operating medium. Normal operating temperature range is -10°F. to +165°F.

Gland and rod seal replacement parts are identified as Symbol RG – Rod Gland Cartridge Kit. A complete seal kit for noncushion cylinder is identified as Symbol SK – Seal Kit. Cushion kits are available for head or cap end and should be order as required.

Replacement parts can be identified from list below. To order specify bore, stroke, model number and serial number shown on cylinder name plate. Order seal kits from table on the following page.

Basic Cylinder Parts Identification

Sym.	Part Name
1	Head
7	Cap
15	Cylinder Body
17	Piston
22	Tie Rod Nut
34	Piston Rod
41	Lipseal Rod Gland
42	Lipseal, Piston
44	Back-up washer, Piston
45	O-Ring, Gland to Head
47	O-ring, End Seal
69	O-Ring, Cush. Adj.
70	Needle, Cush. Adj.
73	Bushing, Cushion
74	Retaining Ring
94	Stud, Rod End
101	Gland
102	Retainer
103	Screw, Retainer
105	Check Seal, Rod End
106	Check Seal, Cap End
107	Washer, Seal
108	Tie Rod
109	Cushion Sleeve

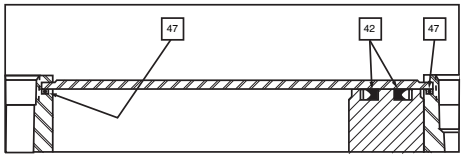

Seal Kit
(Sym. SK)

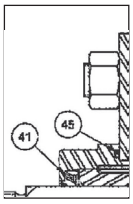

Rod Gland
Cartridge Kit
(Sym. RG)

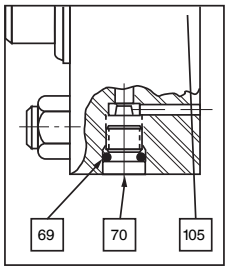

Head End
Cushion Kit
(Sym. CH)

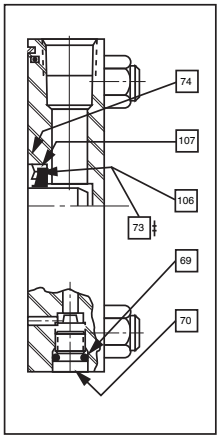

Cap End
Cushion Kit
(Sym. CC)

Bore Size	Tie Rod Nut Torque* Series U250 / U250N Cylinders			
	Steel Tube Tie Rod Nut Torque		Aluminum Tube Tie Rod Nut Torque	
1 1/2	60 in.-lbs.	69 cm-kg	20 in.-lbs.	23 cm-kg
2	11 ft.-lbs.	15 N.m	72 in.-lbs.	83 cm-kg
2 1/2	11 ft.-lbs.	15 N.m	72 in.-lbs.	83 cm-kg
3 1/4	25 ft.-lbs.	34 N.m	18 ft.-lbs.	24 N.m
4	25 ft.-lbs.	34 N.m	18 ft.-lbs.	24 N.m
5	60 ft.-lbs.	81 N.m	37 ft.-lbs.	50 N.m
6	60 ft.-lbs.	81 N.m	37 ft.-lbs.	50 N.m

* (-0%, +5% tolerance) When assembling the cylinder, be sure to torque the tie rods evenly.

Service Kits & Replacement Parts for Series U250 Non-Rotating Cylinders

Seal Kits

Bore Size	Rod Dia.	Rod No.	SKL Seal Kits	SK Magnetic Seal Kits
			Series U250	Series U250
			Consisting of: 1 ea. Symbol # 41, 45, & 2 ea. Symbol # 42 & 47	Consisting of: 1 ea. Symbol # 41, 43, 45, 121 & 2 ea. Symbol # 42, & 47
				Service Class 1 Only
			Part Number	Part Number
2"	5/8"	1	SKL7001MAR	SKM7001MAR
2 1/2"	5/8"	1	SKL7003MAR	SKM7003MAR
3 1/4"	1"	1	SKL7005MAR	SKM7005MAR
4"	1"	1	SKL7007MAR	SKM7007MAR
5"	1"	1	SKL7009MAR	SKM7009MAR

Rod Gland Seal Kits & Cushion Kits

Bore Size	Rod Dia.	Rod No.	Rod Gland Cartridge Kits	Cushion Kits	
			Series U250	Series U250 & U250N	
			Consisting of: 1 each Symbol # 41, 45, 101 & 104	Contains: 1 each Symbol # 69, 70 & 105	Contains: 1 each Symbol # 69, 70, 74, 106 & 107
				Service Class 1 Only**	
				Head End (CH)	Cap End (CC)
			Part Number	Part Number	Part Number
2"	5/8"	1	RGL698MAR	CHL7012MA1	CCL7016MA1
2 1/2"	5/8"	1	RGL6948MAR	CHL7012MA1	
3 1/4"	1"	1	RGL6950MAR	CHL7014MA1	CCL7017MA1
4"	1"	1	RGL6949MAR	CHL7014MA1	
5"	1"	1	RGL6949MAR	CHL7014MA1	

Cylinder Accessories

Taiyo America offers a range of heavy-duty cylinder accessories for convenient mounting of pivot mount cylinders or for use at rod end of fixed mount types. All are load capacity rated for use at 4:1 design factor in tension or compression (pivot pin is rated in shear) when used on bore sizes recommended in tables below. Select rod clevises or knuckles by bore and thread size along with mating parts shown. Pivot pin must be ordered as separate item, if needed.

Mounting Plate

Mounting plates for Style BB (clevis mounted) cylinders are offered. To select proper part number for your application, refer to Chart below.

Mounting Plate	Series U250 / U250N
Part No.	Bore Size
0959810050	1 1/2", 2", 2 1/2"
0959810075	3 1/4", 4", 5"
0959810100	6"

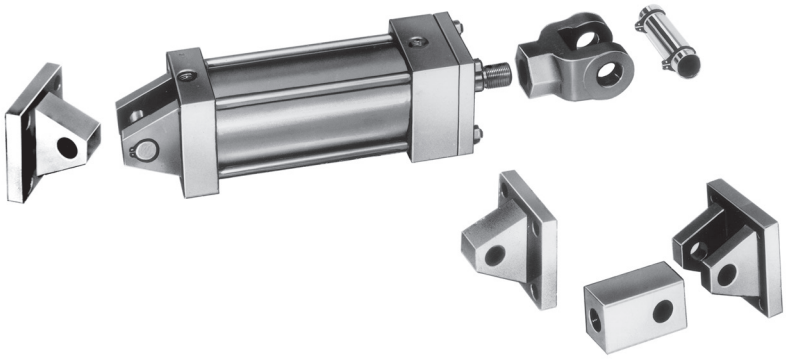

Rod End Accessories

Accessories offered for the rod end of the cylinder include: Rod Clevis, Eye Bracket, Knuckle, Clevis Bracket and Pivot Pin. To select the proper part number for any desired rod mounted accessory, refer to the table below and look opposite the thread size of the rod end as indicated in the first column. The Pivot Pins, Eye Brackets and Clevis Brackets are listed opposite the pin diameter that fits their mating Knuckles or Clevises.

Table A

Thread Size	Pin Ø	Rod Clevis		Mounting Plate or Eye Bracket		Pivot Pin	
		Part Number	Load Capacity (lb)	Forged Steel or Cast Ductile Iron		Part Number	Shear Capacity (lb)
				Part Number	Load Capacity (lb)		
7/16-20	0.500	0509400000	4250	0959810051	4620	0683680000	8600
1/2-20	0.500	0509410000	4900	0959810050[1]	4620	0683680000	8600
3/4-16	0.750	0509420000	11200	0959810075[1]	12370	0683690000	19300
3/4-16	0.750	1332840000	11200	0959810075[1]	12370	0683690000	19300
7/8-14	1.000	0509430000	18800	0959810100[1]	20450	0683700000	34300
1-14	1.000	0509440000	19500	0959810100[1]	20450	0683700000	34300
1-14	1.000	1332850000	19500	0959810100[1]	20450	0683700000	34300

[1] Cylinder accessory dimensions conform to ANSI/NFPA/T3.6.8 R3-2010.

Forged Steel or Cast Ductile Iron Mounting Plate or Eye Bracket Dimensions[2]

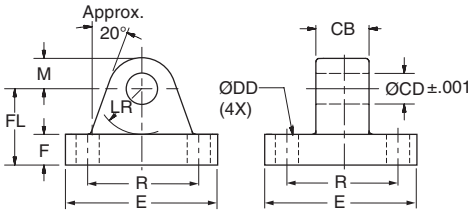

Table B **Note: Cast ductile iron eye brackets must not be welded in place.**

Cast or Forged Part Number	Pin Ø	CB	CD Ø	DD Ø	E (As Cast)	F	FL	LR	M (As Cast)	R
0959810050	0.500	0.75	0.503	0.41	2.50	0.38	1.13	0.69	0.50	1.63
0959810075	0.750	1.25	0.753	0.53	3.50	0.63	1.88	1.13	0.75	2.55
0959810100	1.000	1.50	1.003	0.66	4.50	0.88	2.38	1.37	1.00	3.25

[2] When used to mate with the Rod Clevis, select by pin diameter in the table above.

Rod Clevis Dimensions

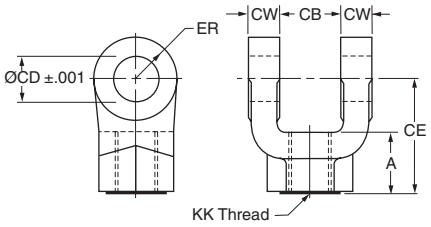

Table C

Part Number[1]	Pin Ø	A	CB	CD Ø	CE	CW	ER	KK Thread
0509400000	0.500	0.75	0.77	0.503	1.50	0.49	0.50	7/16-20
0509410000	0.500	0.75	0.77	0.503	1.50	0.49	0.50	1/2-20
0509420000	0.750	1.13	1.27	0.753	2.13	0.62	0.75	3/4-16
1332840000	0.750	1.13	1.27	0.753	2.38	0.62	0.75	3/4-16
0509430000	1.000	1.63	1.52	1.003	2.94	0.74	1.00	7/8-14
0509440000	1.000	1.63	1.52	1.003	2.94	0.74	1.00	1-14
1332850000	1.000	1.63	1.52	1.003	3.13	0.74	1.00	1-14

Pivot Pin Dimensions

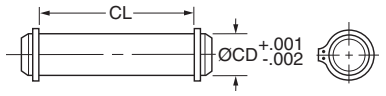

Table D

Part Number	CD Ø	CL
0683680000	0.500	1.88
0683690000	0.750	2.63
0683700000	1.000	3.13

1. Pivot Pins are furnished with Clevis Mounted Cylinders as standard.
2. Pivot Pins are furnished with (2) Retainer Rings.
3. Pivot Pins must be ordered as a separate item if to be used with Knuckles, Rod Clevises, or Clevis Brackets.

Table E

Thread Size	Pin Ø	Knuckle		Clevis Bracket				Pivot Pin	
		Part Number	Load Capacity (lb)	Forged Steel or Cast Ductile Iron		Fabricated Steel		Part Number	Shear Capacity (lb)
				Part Number	Load Capacity (lb)	Part Number	Load Capacity (lb)		
7/16-20	0.500	0690890000	5000	0960160050	7740	0692050000	7300	0683680000	8600
1/2-20	0.500	0690900000	5700	0960160050	7740	0692050000	7300	0683680000	8600
3/4-16	0.750	0690910000	12100	0960160075	13600	0692060000	10880	0683690000	19300
7/8-14	1.000	0690920000	13000	0960160100	23000	0692070000	15180	0683700000	34300
1-14	1.000	0690930000	21700	0960160100	23000	0692070000	15180	0683700000	34300

Knuckle Dimensions

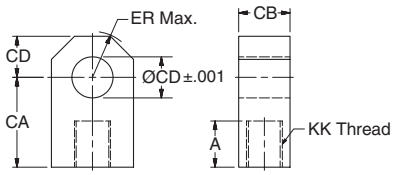

Thread Size thru 1 3/4-12

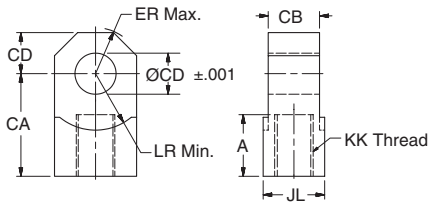

Thread Size 1 7/8-12 & Larger

Table F

Part Number	Pin Ø	A	CA	CB	CD Ø	ER	JL	LR min	KK Thread
0690890000	0.500	0.75	1.50	0.75	0.503	0.59	–	–	7/16-20
0690900000	0.500	0.75	1.50	0.75	0.503	0.59	–	–	1/2-20
0690910000	0.750	1.13	2.06	1.25	0.753	0.87	–	–	3/4-16
0690920000	1.000	1.13	2.38	1.50	1.003	1.15	–	–	7/8-14
0690930000	1.000	1.63	2.81	1.50	1.003	1.15	–	–	1-14

Fabricated Steel Clevis Bracket Dimensions

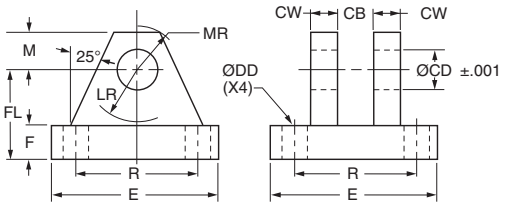

Table G

Fabricated Steel Part Number	Pin Ø	CB	CD Ø	CW	DD Ø	E	F	FL	LR	M	MR	R
0692050000	0.500	0.80	0.503	0.50	0.41	3.50	0.50	1.50	0.75	0.50	0.63	2.55
0692060000	0.750	1.30	0.753	0.63	0.53	5.00	0.63	1.88	1.19	0.75	0.91	3.82
0692070000	1.000	1.59	1.003	0.75	0.66	6.50	0.75	2.25	1.50	1.00	1.25	4.95

Linear Alignment Couplers

Cost Saving Features and Benefits Include...

- Maximum reliability for trouble-free operation, long life and lower operating costs
- Increased cylinder life by reducing wear on Piston and Rod bearings
- Simplifying Cylinder installation and reducing assembly costs
- Increase Rod Bearing and Rod Seal life for lower maintenance costs

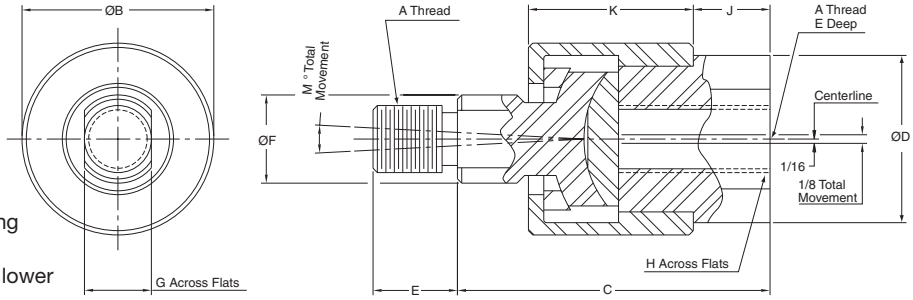

Part No.	A[1] Thread	B Ø	C	D Ø	E	F Ø	G	H	J	K	M	Max. Pull Load (lb)	Max. Approx. Weight (lb)
1347570044	7/16-20	1.38	2.00	1.13	0.75	0.63	0.50	0.88	0.38	1.09	6°	3250	.55
1347570050	1/2-20	1.38	2.00	1.13	0.75	0.63	0.50	0.88	0.38	1.09	6°	4450	.55
1347570063	5/8-18	1.38	2.00	1.13	0.75	0.63	0.50	0.88	0.38	1.09	6°	6800	.55
1347570075	3/4-16	2.00	2.31	1.63	1.13	0.94	0.75	1.31	0.44	1.28	6°	9050	1.4
1347570088	7/8-14	2.00	2.31	1.63	1.13	0.94	0.75	1.31	0.44	1.28	6°	14450	1.4
1347570100	1-14	3.13	3.00	2.38	1.63	1.44	1.25	1.88	0.75	1.78	6°	19425	4.8
1347570125	1 1/4-12	3.13	3.00	2.38	1.63	1.44	1.25	1.88	0.75	1.78	6°	30500	4.8

[1] Metric thread also available - Contact the factory.

How to Order Linear Alignment Couplers — When ordering a cylinder with a threaded male rod end, specify the coupler of equal thread size by part number as listed in the table above, i.e.; Piston Rod “KK” or “CC” dimension is 3/4" - 16", specify coupler part number 1347570075.

Safety Guide for Selecting and Using Hydraulic, Pneumatic Cylinders and Their Accessories

WARNING: ⚠ FAILURE OF THE CYLINDER, ITS PARTS, ITS MOUNTING, ITS CONNECTIONS TO OTHER OBJECTS, OR ITS CONTROLS CAN RESULT IN:

- **Unanticipated or uncontrolled movement of the cylinder or objects connected to it.**
- **Falling of the cylinder or objects held up by it.**
- **Fluid escaping from the cylinder, potentially at high velocity.**

THESE EVENTS COULD CAUSE DEATH OR PERSONAL INJURY BY, FOR EXAMPLE, PERSONS FALLING FROM HIGH LOCATIONS, BEING CRUSHED OR STRUCK BY HEAVY OR FAST MOVING OBJECTS, BEING PUSHED INTO DANGEROUS EQUIPMENT OR SITUATIONS, OR SLIPPING ON ESCAPED FLUID.

Before selecting or using Taiyo America (the Company) cylinders or related accessories, it is important that you read, understand and follow the following safety information. Training is advised before selecting and using the Company's products.

1.0 General Instructions

1.1 Scope – This safety guide provides instructions for selecting and using (including assembling, installing, and maintaining) cylinder products. This safety guide is a supplement to and is to be used with the specific Company publications for the specific cylinder products that are being considered for use.

1.2 Fail Safe – Cylinder products can and do fail without warning for many reasons. All systems and equipment should be designed in a fail-safe mode so that if the failure of a cylinder product occurs people and property won't be endangered.

1.3 Distribution – Provide a free copy of this safety guide to each person responsible for selecting or using cylinder products. Do not select or use the Company's cylinders without thoroughly reading and understanding this safety guide as well as the specific Company publications for the products considered or selected.

1.4 User Responsibility – Due to very wide variety of cylinder applications and cylinder operating conditions, the Company does not warrant that any particular cylinder is suitable for any specific application. This safety guide does not analyze all technical parameters that must be considered in selecting a product. The hydraulic and pneumatic cylinders outlined in this catalog are designed to the Company's design guidelines and do not necessarily meet the design guideline of other agencies such as American Bureau of Shipping, ASME Pressure Vessel Code etc. The user, through its own analysis and testing, is solely responsible for:

- Making the final selection of the cylinders and related accessories.
- Determining if the cylinders are required to meet specific design requirements as required by the Agency(s) or industry standards covering the design of the user's equipment.
- Assuring that the user's requirements are met, OSHA requirements are met, and safety guidelines from the applicable agencies such as but not limited to ANSI are followed and that the use presents no health or safety hazards.
- Providing all appropriate health and safety warnings on the equipment on which the cylinders are used.

1.5 Additional Questions – Call the appropriate Company technical service department if you have any questions or require any additional information. See the Company publication for the product being considered or used, or call 1-847-298-2400, or go to www.parker.com, for telephone numbers of the appropriate technical service department.

2.0 Cylinder and Accessories Selection

2.1 Seals – Part of the process of selecting a cylinder is the selection of seal compounds. Before making this selection, consult the "seal information page(s)" of the publication for the series of cylinders of interest.

The application of cylinders may allow fluids such as cutting fluids, wash down fluids etc. to come in contact with the external area of the cylinder. These fluids may attack the piston rod wiper and or the primary seal and must be taken into account when selecting and specifying seal compounds.

Dynamic seals will wear. The rate of wear will depend on many operating factors. Wear can be rapid if a cylinder is mis-aligned or if the cylinder has been improperly serviced. The user must take seal wear into consideration in the application of cylinders.

2.2 Piston Rods – Possible consequences of piston rod failure or separation of the piston rod from the piston include, but are not limited to are:

- Piston rod and or attached load thrown off at high speed.
- High velocity fluid discharge.
- Piston rod extending when pressure is applied in the piston retract mode.

Piston rods or machine members attached to the piston rod may move suddenly and without warning as a consequence of other conditions occurring to the machine such as, but not limited to:

- Unexpected detachment of the machine member from the piston rod.
- Failure of the pressurized fluid delivery system (hoses, fittings, valves, pumps, compressors) which maintain cylinder position.
- Catastrophic cylinder seal failure leading to sudden loss of pressurized fluid.
- Failure of the machine control system.

Follow the recommendations of the "Piston Rod Selection Chart and Data" in the publication for the series of cylinders of interest. The suggested piston rod diameter in these charts must be followed in order to avoid piston rod buckling.

Piston rods are not normally designed to absorb bending moments or loads which are perpendicular to the axis of piston rod motion. These additional loads can cause the piston rod to fail. If these types of additional loads are expected to be imposed on the piston rod, their magnitude should be made known to our engineering department.

The cylinder user should always make sure that the piston rod is securely attached to the machine member.

On occasion cylinders are ordered with double rods (a piston rod extended from both ends of the cylinder). In some cases a stop is threaded on to one of the piston rods and used as an external stroke adjuster. On occasions spacers are attached to the machine member connected to the piston rod and also used as a stroke adjuster. In both cases the stops will create a pinch point and the user should consider appropriate use of guards. If these external stops are not perpendicular to the mating contact surface, or if debris is trapped between the contact surfaces, a bending moment will be placed on the piston rod, which can lead to piston rod failure. An external stop will also negate the effect of cushioning and will subject the piston rod to impact loading. Those two (2) conditions can cause piston rod failure. Internal stroke adjusters are available with and without cushions. The use of external stroke adjusters should be reviewed with our engineering department.

The piston rod to piston and the stud to piston rod threaded connections are secured with an anaerobic adhesive. The strength of the adhesive decreases with increasing temperature. Cylinders which can be exposed to temperatures above +250°F (+121°C) are to be ordered with a non studded piston rod and a pinned piston to rod joint.

2.3 Cushions – Cushions should be considered for cylinder applications when the piston velocity is expected to be over 4 inches/second.

Cylinder cushions are normally designed to absorb the energy of a linear applied load. A rotating mass has considerably more energy than the same mass moving in a linear mode. Cushioning for a rotating mass application should be reviewed by our engineering department.

2.4 Cylinder Mountings – Some cylinder mounting configurations may have certain limitations such as but not limited to minimum stroke for side or foot mounting cylinders or pressure de-ratings for certain mounts. Carefully review the catalog for these types of restrictions.

Always mount cylinders using the largest possible high tensile alloy steel socket head cap screws that can fit in the cylinder mounting holes and torque them to the manufacturer's recommendations for their size.

2.5 Port Fittings – Hydraulic cylinders applied with meter out or deceleration circuits are subject to intensified pressure at piston rod end.

The rod end pressure is approximately equal to:

operating pressure x effective cap end area

effective rod end piston area

Contact your connector supplier for the pressure rating of individual connectors.

3.0 Cylinder and Accessories Installation and Mounting

3.1 Installation

3.1.1 – Cleanliness is an important consideration, and cylinders are shipped with the ports plugged to protect them from contaminants entering the ports. These plugs should not be removed until the piping is to be installed. Before making the connection to the cylinder ports, piping should be thoroughly cleaned to remove all chips or burrs which might have resulted from threading or flaring operations.

3.1.2 – Cylinders operating in an environment where air drying materials are present such as fast-drying chemicals, paint, or weld splatter, or other hazardous conditions such as excessive heat, should have shields installed to prevent damage to the piston rod and piston rod seals.

3.1.3 – Proper alignment of the cylinder piston rod and its mating component on the machine should be checked in both the extended and retracted positions. Improper alignment will result in excessive rod gland and/or cylinder bore wear. On fixed mounting cylinders attaching the piston rod while the rod is retracted will help in achieving proper alignment.

3.1.4 – Sometimes it may be necessary to rotate the piston rod in order to thread the piston rod into the machine member. This operation must always be done with zero pressure being applied to either side of the piston. Failure to follow this procedure may result in loosening the piston to rod-threaded connection. In some rare cases the turning of the piston rod may rotate a threaded piston rod gland and loosen it from the cylinder head. Confirm that this condition is not occurring. If it does, re-tighten the piston rod gland firmly against the cylinder head.

For double rod cylinders it is also important that when attaching or detaching the piston rod from the machine member that the torque be applied to the piston rod end of the cylinder that is directly attaching to the machine member with the opposite end unrestrained. If the design of the machine is such that only the rod end of the cylinder opposite to where the rod attaches to the machine member can be rotated, consult the factory for further instructions.

3.2 Mounting Recommendations

3.2.1 – Always mount cylinders using the largest possible high tensile alloy steel socket head screws that can fit in the cylinder mounting holes and torque them to the manufacturer's recommendations for their size.

3.2.2 – Side-Mounted Cylinders – In addition to the mounting bolts, cylinders of this type should be equipped with thrust keys or dowel pins located so as to resist the major load.

3.2.3 – Tie Rod Mounting – Cylinders with tie rod mountings are recommended for applications where mounting space is limited. The standard tie rod extension is shown as BB in dimension tables. Longer or shorter extensions can be supplied. Nuts used for this mounting style should be torqued to the same value as the tie rods for that bore size.

3.2.4 – Flange Mount Cylinders – The controlled diameter of the rod gland extension on head end flange mount cylinders can be used as a pilot to locate the cylinders in relation to the machine. After alignment has been obtained, the flanges may be drilled for pins or dowels to prevent shifting.

3.2.5 – Trunnion Mountings – Cylinders require lubricated bearing blocks with minimum bearing clearances. Bearing blocks should be carefully aligned and rigidly mounted so the trunnions will not be subjected to bending moments. The rod end should also be pivoted with the pivot pin in line and parallel to axis of the trunnion pins.

3.2.6 – Clevis Mountings – Cylinders should be pivoted at both ends with centerline of pins parallel to each other. After cylinder is mounted, be sure to check to assure that the cylinder is free to swing through its working arc without interference from other machine parts.

4.0 Cylinder and Accessories Maintenance, Troubleshooting and Replacement

4.1 Storage – At times cylinders are delivered before a customer is ready to install them and must be stored for a period of time. When storage is required the following procedures are recommended.

4.1.1 – Store the cylinders in an indoor area which has a dry, clean and noncorrosive atmosphere. Take care to protect the cylinder from both internal corrosion and external damage.

4.1.2 – Whenever possible cylinders should be stored in a vertical position (piston rod up). This will minimize corrosion due to possible condensation which could occur inside the cylinder. This will also minimize seal damage.

4.1.3 – Port protector plugs should be left in the cylinder until the time of installation.

4.1.4 – If a cylinder is stored full of hydraulic fluid, expansion of the fluid due to temperature changes must be considered. Installing a check valve with free flow out of the cylinder is one method.

4.1.5 – When cylinders are mounted on equipment that is stored outside for extended periods, exposed unpainted surfaces, e.g. piston rod, must be coated with a rust-inhibiting compound to prevent corrosion.

4.2 Cylinder Trouble Shooting

4.2.1 – External Leakage

4.2.1.1 – Rod seal leakage can generally be traced to worn or damaged seals. Examine the piston rod for dents, gouges or score marks, and replace piston rod if surface is rough.

Rod seal leakage could also be traced to gland wear. If clearance is excessive, replace rod bushing and seal. Rod seal leakage can also be traced to seal deterioration. If seals are soft or gummy or brittle, check compatibility of seal material with lubricant used if air cylinder, or operating fluid if hydraulic cylinder. Replace with seal material, which is compatible with these fluids. If the seals are hard or have lost elasticity, it is usually due to exposure to temperatures in excess of 165°F. (+74°C). Shield the cylinder from the heat source to limit temperature to 350°F. (+177°C.) and replace with fluorocarbon seals.

4.2.1.2 – Cylinder body seal leak can generally be traced to loose tie rods. Torque the tie rods to manufacturer's recommendation for that bore size.

Excessive pressure can also result in cylinder body seal leak. Determine maximum pressure to rated limits. Replace seals and retorque tie rods as in paragraph above. Excessive pressure can also result in cylinder body seal leak. Determine if the pressure rating of the cylinder has been exceeded. If so, bring the operating pressure down to the rating of the cylinder and have the tie rods replaced.

Pinched or extruded cylinder body seal will also result in a leak. Replace cylinder body seal and retorque as in paragraph above.

Cylinder body seal leakage due to loss of radial squeeze which shows up in the form of flat spots or due to wear on the O.D. or I.D. – Either of these are symptoms of normal wear due to high cycle rate or length of service. Replace seals as per paragraph above.

4.2.2 – Internal Leakage

4.2.2.1 – Piston seal leak (by-pass) 1 to 3 cubic inches per minute leakage is considered normal for piston ring construction. Virtually no static leak with lipseal type seals on piston should be expected. Piston seal wear is a usual cause of piston seal leakage. Replace seals as required.

4.2.2.2 – With lipseal type piston seals excessive back pressure due to over-adjustment of speed control valves could be a direct cause of rapid seal wear. Contamination in a hydraulic system can result in a scored cylinder bore, resulting in rapid seal wear. In either case, replace piston seals as required.

4.2.2.3 – What appears to be piston seal leak, evidenced by the fact that the cylinder drifts, is not always traceable to the piston. To make sure, it is suggested that one side of the cylinder piston be pressurized and the fluid line at the opposite port be disconnected. Observe leakage. If none is evident, seek the cause of cylinder drift in other component parts in the circuit.

4.2.3 – Cylinder Fails to Move the Load

4.2.3.1 – Pneumatic or hydraulic pressure is too low. Check the pressure at the cylinder to make sure it is to circuit requirements.

4.2.3.2 – Piston Seal Leak – Operate the valve to cycle the cylinder and observe fluid flow at valve exhaust ports at end of cylinder stroke. Replace piston seals if flow is excessive.

4.2.3.3 – Cylinder is undersized for the load – Replace cylinder with one of a larger bore size.

4.3 Erratic or Chatter Operation

4.3.1 – Excessive friction at rod gland or piston bearing due to load misalignment – Correct cylinder-to-load alignment.

4.3.2 – Cylinder sized too close to load requirements – Reduce load or install larger cylinder.

4.3.3 – Erratic operation could be traced to the difference between static and kinetic friction. Install speed control valves to provide a back pressure to control the stroke.

4.4 Cylinder Modifications, Repairs, or Failed Component – Cylinders as shipped from the factory are not to be disassembled and or modified. If cylinders require modifications, these modifications must be done at company locations or by the Company's certified facilities. The Cylinder Division Engineering Department must be notified in the event of a mechanical fracture or permanent deformation of any cylinder component (excluding seals). This includes a broken piston rod, tie rod, mounting accessory or any other cylinder component. The notification should include all operation and application details. This information will be used to provide an engineered repair that will prevent recurrence of the failure.

It is allowed to disassemble cylinders for the purpose of replacing seals or seal assemblies. However, this work must be done by strictly following all the instructions provided with the seal kits.

Offer of Sale

The items described in this document and other documents and descriptions provided by Taiyo America, its subsidiaries and its authorized distributors ("Seller") are hereby offered for sale at prices to be established by Seller. This offer and its acceptance by any customer ("Buyer") shall be governed by all of the following Terms and Conditions. Buyer's order for any item described in its document, when communicated to Seller verbally, or in writing, shall constitute acceptance of this offer. All goods, services or work described will be referred to as "Products".

1. Terms and Conditions. Seller's willingness to offer Products, or accept an order for Products, to or from Buyer is subject to these Terms and Conditions or any newer version of the terms and conditions found on-line at www.taiyoamericacylinders.com/saleterms/. Seller objects to any contrary or additional terms or conditions of Buyer's order or any other document issued by Buyer.

2. Price Adjustments; Payments. Prices stated on Seller's quote or other documentation offered by Seller are valid for 30 days, and do not include any sales, use, or other taxes unless specifically stated. Unless otherwise specified by Seller, all prices are F.C.A. Seller's facility (INCOTERMS 2010). Payment is subject to credit approval and is due 30 days from the date of invoice or such other term as required by Seller's Credit Department, after which Buyer shall pay interest on any unpaid invoices at the rate of 1.5% per month or the maximum allowable rate under applicable law.

3. Delivery Dates; Title and Risk; Shipment. All delivery dates are approximate and Seller shall not be responsible for any damages resulting from any delay. Regardless of the manner of shipment, title to any products and risk of loss or damage shall pass to Buyer upon placement of the products with the shipment carrier at Seller's facility. Unless otherwise stated, Seller may exercise its judgment in choosing the carrier and means of delivery. No deferment of shipment at Buyers' request beyond the respective dates indicated will be made except on terms that will indemnify, defend and hold Seller harmless against all loss and additional expense. Buyer shall be responsible for any additional shipping charges incurred by Seller due to Buyer's acts or omissions.

4. Warranty. Seller warrants that the Products sold hereunder shall be free from defects in material or workmanship for a period of eighteen months from the date of delivery to Buyer. The prices charged for Seller's products are based upon the exclusive limited warranty stated above, and upon the following disclaimer: **DISCLAIMER OF WARRANTY: THIS WARRANTY COMPRISES THE SOLE AND ENTIRE WARRANTY PERTAINING TO PRODUCTS PROVIDED HEREUNDER. SELLER DISCLAIMS ALL OTHER WARRANTIES, EXPRESS AND IMPLIED, INCLUDING DESIGN, MERCHANTABILITY AND FITNESS FOR A PARTICULAR PURPOSE.**

5. Claims; Commencement of Actions. Buyer shall promptly inspect all Products upon delivery. No claims for shortages will be allowed unless reported to the Seller within 10 days of delivery. No other claims against Seller will be allowed unless asserted in writing within 30 days after delivery. Buyer shall notify Seller of any alleged breach of warranty within 30 days after the date the defect is or should have been discovered by Buyer. Any action based upon breach of this agreement or upon any other claim arising out of this sale (other than an action by Seller for an amount due on any invoice) must be commenced within 12 months from the date of the breach without regard to the date breach is discovered.

6. LIMITATION OF LIABILITY. UPON NOTIFICATION, SELLER WILL, AT ITS OPTION, REPAIR OR REPLACE A DEFECTIVE PRODUCT, OR REFUND THE PURCHASE PRICE. **IN NO EVENT SHALL SELLER BE LIABLE TO BUYER FOR ANY SPECIAL, INDIRECT, INCIDENTAL OR CONSEQUENTIAL DAMAGES ARISING OUT OF, OR AS THE RESULT OF, THE SALE, DELIVERY, NON-DELIVERY, SERVICING, USE OR LOSS OF USE OF THE PRODUCTS OR ANY PART THEREOF, OR FOR ANY CHARGES OR EXPENSES OF ANY NATURE INCURRED WITHOUT SELLER'S WRITTEN CONSENT, EVEN IF SELLER HAS BEEN NEGLIGENT, WHETHER IN CONTRACT, TORT OR OTHER LEGAL THEORY. IN NO EVENT SHALL SELLER'S LIABILITY UNDER ANY CLAIM MADE BY BUYER EXCEED THE PURCHASE PRICE OF THE PRODUCTS.**

7. User Responsibility. The user, through its own analysis and testing, is solely responsible for making the final selection of the system and Product and assuring that all performance, endurance, maintenance, safety and warning requirements of the application are met. The user must analyze all aspects of the application and follow applicable industry standards and Product information. If Seller provides Product or system options, the user is responsible for determining that such data and specifications are suitable and sufficient for all applications and reasonably foreseeable uses of the Products or systems.

8. Loss to Buyer's Property. Any designs, tools, patterns, materials, drawings, confidential information or equipment furnished by Buyer or any other items which become Buyer's property, will be considered obsolete and may be destroyed by Seller after two consecutive years have elapsed without Buyer ordering the items manufactured using such property. Seller shall not be responsible for any loss or damage to such property while it is in Seller's possession or control.

9. Special Tooling. A tooling charge may be imposed for any special tooling, including without limitation, dies, fixtures, molds and patterns, acquired to manufacture Products. Such special tooling shall be and remain Seller's property notwithstanding payment of any charges by Buyer. In no event will Buyer acquire any interest in apparatus belonging to Seller which is utilized in the manufacture of the Products, even if such apparatus has been specially converted or adapted for such manufacture and notwithstanding any charges paid by Buyer. Unless otherwise agreed, Seller shall have the right to alter, discard or otherwise dispose of any special tooling or other property in its sole discretion at any time.

10. Buyer's Obligation; Rights of Seller. To secure payment of all sums due or otherwise, Seller shall retain a security interest in the goods delivered and this agreement shall be deemed a Security Agreement under the Uniform Commercial Code. Buyer authorizes Seller as its attorney to execute and file on Buyer's behalf all documents Seller deems necessary to perfect its security interest.

11. Improper use and Indemnity. Buyer shall indemnify, defend, and hold Seller harmless from any claim, liability, damages, lawsuits, and costs (including attorney fees), whether for personal injury, property damage, patent, trademark or copyright infringement or any other claim, brought by or incurred by Buyer, Buyer's employees, or any other person, arising out of: (a) improper selection, improper application or other misuse of Products purchased by Buyer from Seller; (b) any act or omission, negligent or otherwise, of Buyer; (c) Seller's use of patterns, plans, drawings, or specifications furnished by Buyer to manufacture Product; or (d) Buyer's failure to comply with these terms and conditions. Seller shall not indemnify Buyer under any circumstance except as otherwise provided.

12. Cancellations and Changes. Orders shall not be subject to cancellation or change by Buyer for any reason, except with Seller's written consent and upon terms that will indemnify, defend and hold Seller harmless against all direct, incidental and consequential loss or damage. Seller may change product features, specifications, designs and availability with notice to Buyer.

13. Limitation on Assignment. Buyer may not assign its rights or obligations under this agreement without the prior written consent of Seller.

14. Force Majeure. Seller does not assume the risk and shall not be liable for delay or failure to perform any of Seller's obligations by reason of circumstances beyond the reasonable control of Seller (hereinafter "Events of Force Majeure"). Events of Force Majeure shall include without limitation: accidents, strikes or labor disputes, acts of any government or government agency, acts of nature, delays or failures in delivery from carriers or suppliers, shortages of materials, or any other cause beyond Seller's reasonable control.

15. Waiver and Severability. Failure to enforce any provision of this agreement will not waive that provision nor will any such failure prejudice Seller's right to enforce that provision in the future. Invalidation of any provision of this agreement by legislation or other rule of law shall not invalidate any other provision herein. The remaining provisions of this agreement will remain in full force and effect.

16. Termination. Seller may terminate this agreement for any reason and at any time by giving Buyer thirty (30) days written notice of termination. Seller may immediately terminate this agreement, in writing, if Buyer: (a) commits a breach of any provision of this agreement (b) appointments a trustee, receiver or custodian for all or any part of Buyer's property (c) files a petition for relief in bankruptcy on its own behalf, or by a third party (d) makes an assignment for the benefit of creditors, or (e) dissolves or liquidates all or a majority of its assets.

17. Governing Law. This agreement and the sale and delivery of all Products hereunder shall be deemed to have taken place in and shall be governed and construed in accordance with the laws of the State of Ohio, as applicable to contracts executed and wholly performed therein and without regard to conflicts of laws principles. Buyer irrevocably agrees and consents to the exclusive jurisdiction and venue of the courts of Cuyahoga County, Ohio with respect to any dispute, controversy or claim arising out of or relating to this agreement.

18. Indemnity for Infringement of Intellectual Property Rights. Seller shall have no liability for infringement of any patents, trademarks, copyrights, trade dress, trade secrets or similar rights except as provided in this Section. Seller will defend and indemnify Buyer against allegations of infringement of U.S. patents, U.S. trademarks, copyrights, trade dress and trade secrets ("Intellectual Property Rights"). Seller will defend at its expense and will pay the cost of any settlement or damages awarded in an action brought against Buyer based on an allegation that a Product sold pursuant to this Agreement infringes the Intellectual Property Rights of a third party. Seller's obligation to defend and indemnify Buyer is contingent on Buyer notifying Seller within ten (10) days after Buyer becomes aware of such allegations of infringement, and Seller having sole control over the defense of any allegations or actions including all negotiations for settlement or compromise. If a Product is subject to a claim that it infringes the Intellectual Property Rights of a third party, Seller may, at its sole expense and option, procure for Buyer the right to continue using the Product, replace or modify the Product so as to make it noninfringing, or offer to accept return of the Product and return the purchase price less a reasonable allowance for depreciation. Notwithstanding the foregoing, Seller shall have no liability for claims of infringement based on information provided by Buyer, or directed to Products delivered hereunder for which the designs are specified in whole or part by Buyer, or infringements resulting from the modification, combination or use in a system of any Product sold hereunder. The foregoing provisions of this Section shall constitute Seller's sole and exclusive liability and Buyer's sole and exclusive remedy for infringement of Intellectual Property Rights.

19. Entire Agreement. This agreement contains the entire agreement between the Buyer and Seller and constitutes the final, complete and exclusive expression of the terms of sale. All prior or contemporaneous written or oral agreements or negotiations with respect to the subject matter are herein merged.

20. Compliance with Law, U. K. Bribery Act and U.S. Foreign Corrupt Practices Act. Buyer agrees to comply with all applicable laws and regulations, including both those of the United Kingdom and the United States of America, and of the country or countries of the Territory in which Buyer may operate, including without limitation the U. K. Bribery Act, the U.S. Foreign Corrupt Practices Act ("FCPA") and the U.S. Anti-Kickback Act (the "Anti-Kickback Act"), and agrees to indemnify and hold harmless Seller from the consequences of any violation of such provisions by Buyer, its employees or agents. Buyer acknowledges that they are familiar with the provisions of the U. K. Bribery Act, the FCPA and the Anti-Kickback Act, and certifies that Buyer will adhere to the requirements thereof. In particular, Buyer represents and agrees that Buyer shall not make any payment or give anything of value, directly or indirectly to any governmental official, any foreign political party or official thereof, any candidate for foreign political office, or any commercial entity or person, for the purpose of influencing such person to purchase products or otherwise benefit the business of Seller.

Taiyo America
1700 East Spring Street
St. Marys, Ohio 45885 USA
phone (419) 300-8811
fax (419) 300-9765
www.taiyoamericacylinders.com

06 /19 / Catalog HY08-T0915-1/NA